B.G.S INSTITUTE OF TECHNOLOGY

BG Nagar, Nagamangala Taluk, Mandya District– 571448

Affiliated to Visvesvaraya Technological University, Belgaum.

DEPARTMENT OF MECHANICAL ENGINEERING

CERTIFICATE

This is to certify that the Project Report entitled ""**DESIGN AND FABRICATION OF FINGER MOVEMENT CONTROLLED STRETHER CUM WHEEL CHAIR FOR SPECIALLY ABLED PEOPLE**"is carried out by**Mr. UMESH M(4BW16ME044), Mr. TIRUMALA MASTAPPA NAIK (4BW17ME054), Mr. GAGAN KUMAR H S (4BW18ME406) & Mr. RAJESHA N (4BW18ME412),** in partialfulfilment for the award of **Bachelor of Engineering in Mechanical Engineering** of the **Visvesvaraya Technological University,** Belgaumduring the year 2020-2021.It iscertified that all correction/suggestions indicated for internal assessment have been incorporated in the report deposited in the department library. The Internship Seminar report has been approved as it satisfies the academic requirements in respect of Internship Seminar work prescribed for the said degree.

Signature of the Guide	Signature of HOD	Signature of Principal
Prof. Santhosh kumar T C	**Dr. Manjunath S H**	**Dr. B K Narendra**

Head of the Department
Department of Mechanical Engineering
BGSIT B.G.Nagar-571448

External Viva

Name of the examiners	Signature
1. Dr. Rangaratha swamy. L	
2. Dr. Girisha. K.B.	

VISVESVARAYA TECHNOLOGICAL UNIVERSITY

"Jnana-Sangama", Belgaum 590014, Karnataka, India

A PROJECT REPORT ON

"DESIGN AND FABRICATION OF FINGER MOVEMENT CONTROLLED STRETCHER CUM WHEEL CHAIR FOR SPECIALLY ABLED PEOPLE"

Submitted in partial fulfilment of the requirements for the award of the degree of

BACHELOR OF ENGINEERING

IN

MECHANICAL ENGINEERING

For the Academic Year 2020-2021

Submitted By

UMESH M (4BW16ME044)

TIRUMALA MASTAPPA NAIK (4BW17ME054)

GAGAN KUMAR H S (4BW18ME406)

RAJESHA N (4BW18ME412)

Under the Guidance of

Mr. SANTHOSH KUMAR T.C M.Tech

Assistant Professor, Dept. Of Mech, BGSIT

DEPARTMENT OF MECHANICAL ENGINEERING

B.G.S INSITUTE OF TECHNOLOGY

BG Nagar, Nagamangala Taluk, Mandya District– 571448

B.G.S INSTITUTE OF TECHNOLOGY

BG Nagar, Nagamangala Taluk, Mandya District– 571448

Affiliated to Visvesvaraya Technological University, Belgaum.

DEPARTMENT OF MECHANICAL ENGINEERING

CERTIFICATE

This is to certify that the Project Report entitled ""**DESIGN AND FABRICATION OF FINGER MOVEMENT CONTROLLED STRETHER CUM WHEEL CHAIR FOR SPECIALLY ABLED PEOPLE**"is carried out by**Mr. UMESH M(4BW16ME044), Mr. TIRUMALA MASTAPPA NAIK (4BW17ME054), Mr. GAGAN KUMAR H S (4BW18ME406) & Mr. RAJESHA N (4BW18ME412),** in partialfulfilment for the award of **Bachelor of Engineering in Mechanical Engineering** of the **Visvesvaraya Technological University,** Belgaumduring the year 2020-2021.It iscertified that all correction/suggestions indicated for internal assessment have been incorporated in the report deposited in the department library. The Internship Seminar report has been approved as it satisfies the academic requirements in respect of Internship Seminar work prescribed for the said degree.

_____	_____	_____
Signature of the Guide	Signature of HOD	Signature of Principal
Prof. Santhosh kumar T C	**Dr. Manjunath S H**	**Dr. B K Narendra**

External Viva

Name of the examiners Signature

1._____ 2.

_____

ACKNOWLEDGEMENT

The completion of any project involves the efforts of many people. We have been lucky to receive a lot of help and support from all persons during the making of this project, so with gratitude we take this opportunity to acknowledge all those who guided and encouraged me to emerge successful.

It gives us immense pleasure in expressing our deepest sincere thoughts of gratitude to our college president **Jagadguru Sri Sri Sri Dr|| Nirmalanandanatha Mahaswamiji, Sri Adichunchanagiri Shihkshana Trust (R.)**

I would like to convey my heartful thanks to our beloved Principal**Dr. BK Narendra,** BGSIT, B.G Nagar for having supported me in my academic's endeavors.

I am greatly indebted **to Dr. Manjunath S H**, HOD, Dept. of Mechanical Engineering for giving the opportunity to embark upon this topic.

We would like to sincerely thank our project co-ordinator **Dr. Girish K B** professor, Dept. of Mechanical Engineering, BGSIT, B G Nagar, Mandya for his valuable guidance.

We would like to sincerely thank our project guide**. Santhosh kumar T C**, Assistant professor, Dept. of Mechanical Engineering, BGSIT, B G Nagar, Mandya for his valuable guidance, support and constructive suggestions for betterment of this project work.

Once again, I take this opportunity to extend my earnest gratitude and respect to all the Teaching & Non-teaching staff of the department.

Regards,

UMESH M (4BW16ME044)
TIRUMALA MASTAPPA NAIK (4BW17ME054)
GAGAN KUMAR H S (4BW18ME406)
RAJESHA N (4BW18ME412)

CONTENTS

1. INTRODUCTION
   1.1. TYPES OF DISABILITIES
   1.2. ABOUT THE PROBLEM
   1.3. STRETCHER
   1.4. AIM
   1.5. SCOPE
   1.6. OBJECTIVES
   1.7. COMPONENTS
2. LITERATURE REVIEW
3. DESIGN CONSIDERATION
   3.1. FACTORS DETERMNING THE CHOICE OF MATERIALS
   3.2. METHODOLGY
4. BLOCK DIAGRAM AND WORKING
5. COMPONENTS AND DESCRIPYION
   5.1. BATTERY
   5.2. D.C. MOTOR
   5.3. MILD STEEL MATERIAL
   5.4. NUT & BOLT
   5.5. BALL BEARING
   5.6. SPROCKET & CHAIN DRIVE
6. METAL FINISHING
   6.1. ARC WELDING
   6.2. CORROSION PREVENTION
7. MODEL OF THE PROJECT
8. DESIGN & CALCULATION
   8.1. POWER CALCULATION
   8.2. LOAD CALCULATION
   8.3. DESIGN OF LEAD SCREW
   8.4. LIST OF MATERIALS
   8.5. MATERIALS COST
   8.6. LABOUR COST
   8.7. OVERHEAD CHARGES
   8.8. FUTURE SCOPE
   8.9. CONCLUSION
9. REFERENCES

CHAPTER-1

INTRODUCTION

Driving a wheelchair in day to day life is difficult and becomes even more difficult for a person with physical disability. Some people with arms disability cannot navigate the wheelchair in the desired direction. Therefore Automatic wheelchair is developed to solve the problem for navigation and safe movement in the desired direction. Different input methods can be used to perform task. Wheel chair has become a boon for most of the movement impaired individuals right from its earlier introduction. As time changed the requirement of the wheel chair also changed to make out the needs of different classes of patients.

Lots of research has been going on this field and which are aimed at fulfilling these requirements. So many problems are faced by the bed ridden patients sometimes they feel lonely and will be craving for a change in their ambience. Ordinary wheel chair is used by them but this wheel chair moves by manual means. This is where the significance of Automatic wheel chair cum bed arises as this doesn't require a caretaker. The recent developments in robotics, artificial intelligence and sensor technology promises enormous scope in development of advanced wheel chair.

In order to overcome the problems an automatic wheel chair cum bed having adequate features need to be designed. The automatic wheel chair cum bed comprises of a wheel chair which can be converted into a complete bed. Automatic wheel chair cum bed can be controlled by joystick, remote control etc. A motorized wheel chair or electric-powered wheel chair is a wheel chair that is propelled by means of an electric motor rather than manual power. Motorized wheel chairs are useful for those who are not able to impel a manual wheel chair or who may need to employ a wheel chair for distances or over terrain in a manual wheel chair. They may also be used not just by people with conventional mobility impairments, but also by people with cardiovascular and fatigue based conditions.

Electric wheel chairs have enhanced the quality of life for many people with physical disabilities through the mobility they afford The selection of power chair will rely on many factors; including the kind of surface setting the chair will be driven over, the need to settle thresholds and curbs, and clearance widths in accustomed environment. The most fundamental job of the chair is to take input from the user, usually in the form of a small

joystick, and to move the person in the preferred direction. The last few years have seen abundant improvements and models that give the user unmatched control of the wheel chair in terms of both user effort and vehicle aptitude.

In this wheelchair, we are using Flex Sensor command for the mobility in desired direction. Since Automatic wheelchair can gain speed which may not be required. So, we need to control the speed of the wheelchair. So, to control the speed of the wheelchair we use PWM method for the movement in forward, backward, left and right direction.

1.1 Types of Disability:

Disability is caused by impairments to various subsystems of the body - these can be broadly sorted into the following categories.

- Physical Disability
- Sensory Disability
    - Visual Impairment
    - Hearing Impairment
    - Olfactory and gustatory Impairment
    - Somatosensory Impairment
    - Balance Disorder
- Intellectual Disability
- Mental health and emotional disabilities
- Developmental Disability
- Nonvisible Disability

1.1.1 Physical Disability:

Fig. No. 1.1: Physical Disability

1.1.2 Sensory Disability:

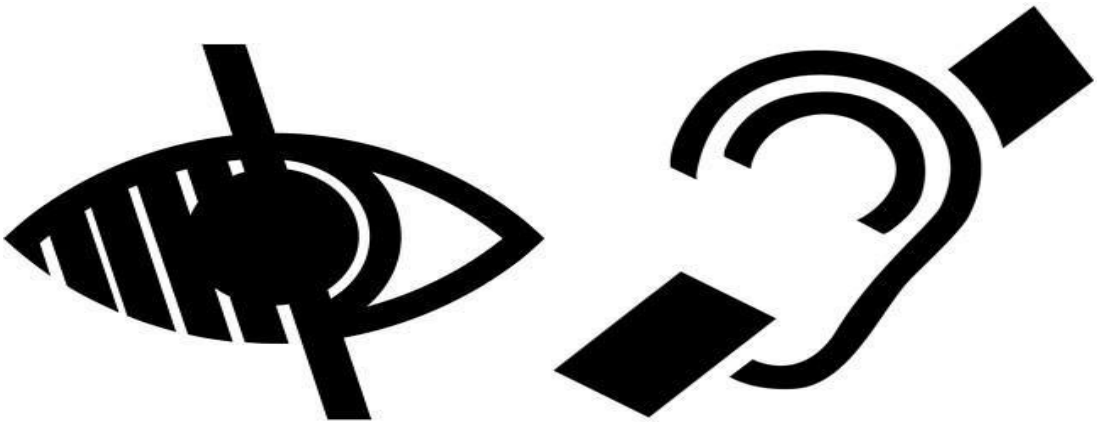

Fig. No. 1.2: Sensory Disability

1.2 ABOUT THE PROBLEM :

The problem of transfer patients exists from ancient times. People who got seriously injured or ill, were carried by others by means of wooden stretcher with cloth or leather tied to it. Later they were carried on wheels which reduced the effort of the people carrying them. Today the problem still exists. Though we have evolved in the field of healthcare and technology we are not yet able to address the problem efficiently.

1.2.1 WHEELCHAIR:

Wheelchairs have been around for hundreds of years, but early wheelchairs were intended only to help a disabled individual move from point A to point B. As society progressed and disabled individuals became more integrated, the role of the wheelchair began to change as well. Wheelchairs are now considered not only a means of transportation but also as a way to allow users to express their individuality. The earliest records of wheeled furniture was an inscription found on a stone slate in China and a child's bed depicted in a frieze on a Greek vase, both dating back to the 6th century B.C.E. The first records of wheeled seats being used for transporting the disabled date to three centuries later in China; the Chinese used their invented wheelbarrow to move people as well as heavy objects. A distinction between the two functions was not made for another several hundred years until when images of wheeled chairs made specifically to carry people begin to occur in Chinese art. There were many attempts to connect furniture to wheels dating back to the time of Christ. But perhaps the first wheelchair was invented for King

Phillip II of Spain. A drawing of the King dated 1595 shows him in a chair with wheels, armrests and footrests. However, he needed assistance to propel it. In 1665 one of the first self-propelled vehicles was invented by Stephan Farfler. Harry Jennings and his disabled friend Herbert Everest, both mechanical engineers, invented the first lightweight, steel, collapsible wheelchair in 1933. Mr. Everest had broken his back in a mining accident.

The two saw the business potential of the invention and went on to become the first mass-manufacturers of wheelchairs: Everest and Jennings. Their "x-brace" design is still in common use, albeit with updated materials and other improvements. In the 1950's the first powered wheelchair was developed. It used a motor to power the wheelchair. It was around the same time that wheelchair sports were first started. In the year 1964 the first Paralympics games were held in Tokyo, Japan.

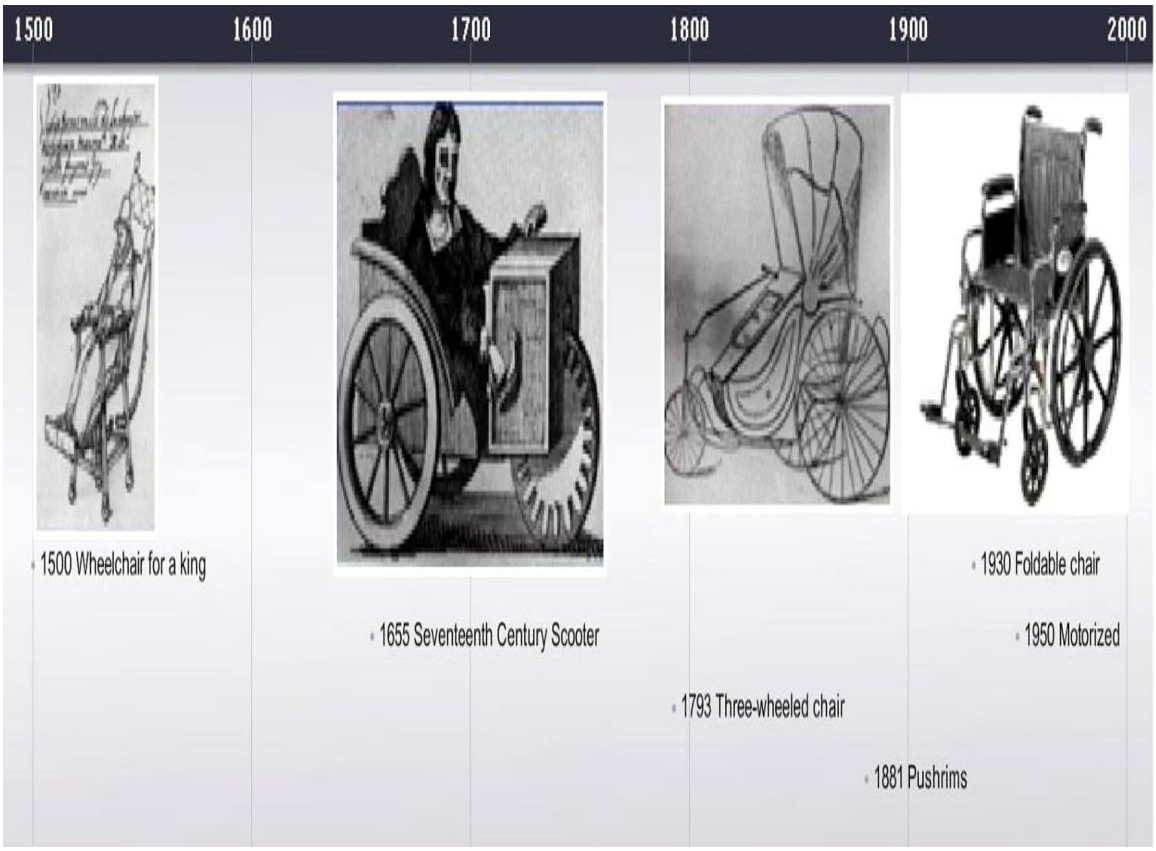

Fig. No. 1.3: Oldenday's wheelchair

Modern day wheel chairs contain light materials, microprocessor controlled and many more sophisticated systems. There is a revolution of wheelchairs available today driven by needs and desire or man today. The future expects a better range of wheelchairs that could suit the imagination of the human mind and serve the needy. The basic structure of the wheelchair contains various parts. In simple words its nothing but a set of wheels attached to a chair. There are some important things a wheelchair must contain. A seat

must be comfortable, so that the person does not get tired sitting on it for a long time. It must contain a backrest that provides a good lumbar support. It must have an arm rest at an optimum height and a also a foot rest. The most important think is it must have brakes for the wheels.

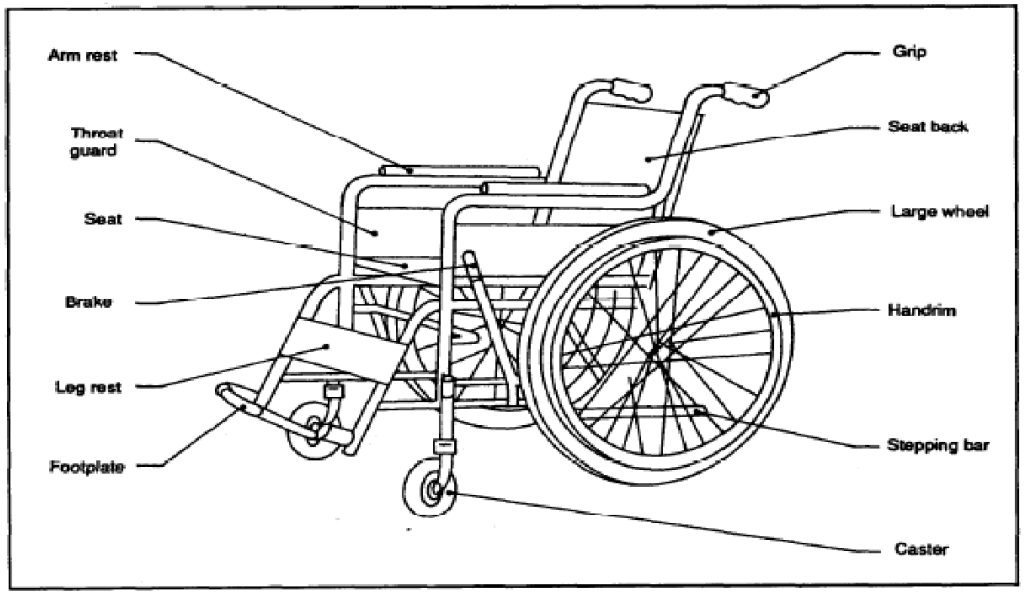

Fig. No. 1.4: Parts of a wheelchair

Since the birth of the wheelchair there have been many modifications in its design. Today there exists a huge variety of wheelchairs- manually, electric, or self-propelled, foldable or rigid. Apart from these they are classified based on their usage, standing wheelchair, sports wheelchair, mobility scooters, bathroom wheelchair, steps climbing wheelchair etc. The range of wheelchairs reflects the demand to meet individual needs.

1.2.2 Types of Wheelchairs

Fig. No. 1.5: Typesof wheelchairs

1.2.3 Manual wheelchairs:

Manual wheelchairs are those moved by the user or an attendant. By controlling the push rims, users can travel forward and backward at speeds dictated by the amount of force theyare able to apply, they can also turn left or right and negotiate small dips and rises that lie ahead.

1.2.4 Manual Transit wheelchairs:

Manual transit chairs generally have small rear wheels without push rims. These wheelchairs are most likely to be seen in buildings such as airports and hospitals where porters act as attendants. These are also called manual transfer chairs.

1.2.5 Electric wheelchairs:

Power (Electric) Wheelchairs are also called “motorized wheelchairs” and sometimes abbreviated EPW (electric powered wheelchairs); are powered by an electric motor. These chairs are navigated by controls systems. Individuals too weak to maneuver a manually powered or standard wheelchair benefit from power chairs, as do individuals with heart and/or breathing conditions.

1.2.6 Wheelbase:

A wheelbase chair, otherwise known as a scooter, has four small wheels extending from a low platform. The type of chair mounted on this platform varies according to the disability and needs of the user; some are even molded from a cast taken of the user’s most appropriate sitting position.

1.2.7 Sports chairs:

Since the 1970s, disabled athletes have had an increasing array of specialized wheelchairs to help them achieve the most from their chosen sport. These chairs can look very different from each other, but what they usually have in common is lightweight frames made from composite material; solidity (which means that they do not fold); and enhanced stability for sudden turns (this is achieved by using angled wheels).

1.2.8 Stand-up:

Stand-up wheelchairs are fitted with a hydraulic pump that lifts and tilts the seat, thereby enabling the user to "stand up" and yet be fully supported. This is an invaluable feature if the user needs to reach an item on a shelf either at home or while out shopping.

1.2.9 Stair-climbing wheelchairs:

Climbing stairs is the ultimate test for a wheelchair, and there are a number of solutions available. Battery-operated supports at the back that act as stabilizers as the chair climbs.
A series of flexible wheels turning within rubber tracks that grip the steps.

1.3 STRETCHER

A stretcher is a medical device to carry patients for a short duration of time. A stretcher contains a surface which support for carrying patients, and has handles on either side along its length to help carry it.

Stretchers have been used since antiquity, on battlefields and in emergency situations, where wheeled vehicles are hindered by rough terrain. In their simplest form, they generally consisted of a canvas sling with long edges sewn to themselves to form pockets through with wooden poles could be slid. Today there are a wide variety of stretchers available, involving lightweight materials, attachments so that it can be fitted to other contraptions.

1.3.1 TYPES OF STRETCHERS

Some of the types of stretchers are explained below:

1.3.1.1 Basket stretcher

A basket stretcher is used in situation when an injured person needs transportation by foot to medical attention. The stretcher disassembles in two halves, and if needed for rescue assembles in seconds.

1.3.1.2Ambulance stretcher

An ambulance stretcher, also known as a little or gurney, consists of a solid frame and a heavy-duty cloth that stretches across it. The ambulance often gives a rough ride. This type of stretcher absorbs part of the impact to prevent further injury. Ambulance stretchers often adjust in position, aiding the paramedic in tending to the injured person's needs.

1.3.1.3 Folding stretcher

A folding stretcher is used to transport the injured from the inside of a building to an ambulance stretcher. It is portable and folds in half for convent storage. This stretcher is also light weight when carried, and made of high strength materials. They are available in several sizes to fit people of various sizes.

1.3.1.4 Pole Stretcher

The military often used pole stretchers to transport the wounded to a medical facility. The stretcher have heavy-duty poles that extend on each side so two men can carry it. Pole stretchers also are lightweight, and have no-slip handgrips for firm control while handling.

1.3.2 THEME BOARD

Fig. No. 1.6:Theme Board

1.4 AIM:

To design and fabrication of flex sensor controlled wheelchair based on the finger movement of the user and control the vehicle according to the command given by the operating person.

1.5 SCOPE:

- The technology can also enhanced safety for users who use ordinary joystick-controlled wheelchair, by preventing collision with walls, fixed objects, furniture and other people.
- The project is completed on April 2020 and approximate cost is Rs.24,000 /-

1.6 OBJECTIVES:

- To help the specially abled person to navigate without the help of any other individual.
- To provide the proper moving technology for the person with physical disability or sickness.

- To drive& control the wheelchair “forward, backward, maximum, medium, minimum and stop” by using flex sensors.
- To convert wheelchair into stretcher, so that the patient can be seated or laid down by scissor lifting mechanism.

1.7 METHODOLOGY:

- Four Flex Sensors is used as input device to navigate the Automatic wheelchair in different directions.
- FLEX SENSOR produces analog signal i.e, its resistance increases or decreases depending on the direction of bend which is given to the arduino.
- The Arduino converts three analog signals into digital using the inbuilt ADC, therefore different ADC values are obtained with different touch positions.
- This command is passed on to the DC motors driver which in turn rotates the DC motor (wheel) and the mobility of the wheelchair is observed.
- Microcontroller is already been programmed for different code combinations, so that the decoded signal gets converted into appropriate movement of wheelchair with the help of relays and DC motor.
- By sending signal to the microcontroller and to the relay switch to activate the motor of the wheel chair.

1.8 COMPONENTS:

- MS FRAME
- MS shaft
- Spur gears
- Dc motors
- Batteries
- MS sheet metal
- Relay switch
- Micro controller
- Flex sensors
- 2 wheels
- Toggle switches
- Connecting wires, bolts, nuts, screws, washers etc.

CHAPTER – 2

LITERATURE REVIEW

2.1 WHEEL-CHAIR CONTROL USING ACCELEROMETER BASED GESTURE TECHNOLOGY

Sandeep,Supriya, M.Tech Scholar, Assistant Professor, "Wheel-Chair Control Using Accelerometer Based Gesture Technology", Volume 4, Issue 5, May 2015

This work presents a novel approach to gesture recognition system using accelerometer MEMS sensor in addition with ultrasonic obstacle detection. In this paper present a low cost, easily learnt and accessible system which utilizes the MEMS technology to detect

the gesture. MEMS based technology is extensively used in many fields like motion control, tilt sensing, mobile phones and many more.

This Automatic wheelchair basically works on the principle of acceleration, as the user moves his hand or tilts his hand it generates analog signal proportional to tilts that are processed by microcontroller unit and thus gives commands to the motors in which direction rotates. The wheel-chair movement can be controlled in forward, reverse, left and right direction with obstacle detection using ultrasonic sensor. This wheel-chair automatically senses the presence of obstacle in its path and deviate its direction of movement.

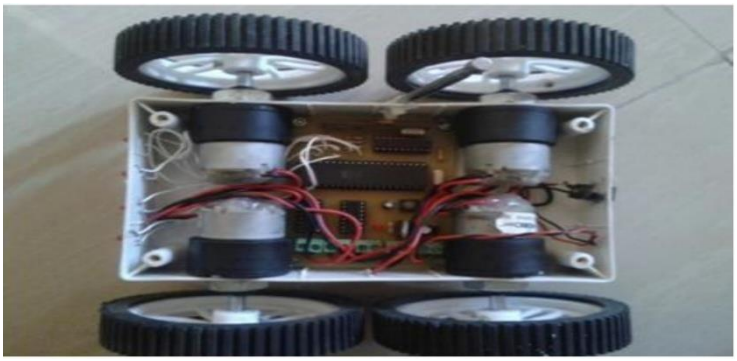

Fig. No. 2.1: Prototype Model

In this paper, an improved gesture technology based system based on portable and low cost components in a wearable form is proposed and implemented. The proposed system constitutes a promising user interface to navigate the wheelchair in outside and inside the home without external help.

2.2 HAND MOVEMENTS BASED CONTROL OF AN INTELLIGENT WHEELCHAIR USING ACCELEROMETER, OBSTACLE AVOIDANCE USING ULTRASONIC AND IR SENSORS

D. Anjaneyulu, Mr. B.V.N.R. Siva Kumar "Hand movements based control of an intelligent wheelchair Using Accelerometer, obstacle avoidance using Ultrasonic and IR sensors", Volume 11, Issue 07, July 2015

In this project used Accelerometer, ultrasonic and infrared sensor systems has been integrated in this wheelchair. In this have a Pre fabricated Wheel Chair which can be driven with using Accelerometer and with the possibility of avoiding obstacles using IR sensor and downstairs or hole detection using Ultrasonic Sensor. Intended users control the system by wearing a glove fitted with accelerometer for controlling the movement and

direction of the wheelchair. The MEMS sensor senses the angle of the hand, i.e. according to the tilt of hand it gives voltages to microcontroller. The main advantage of this wheelchair is low cost, low power consumption, easy to control.

Fig. No. 2.2: Complete Accelerometer controlled wheelchair with a man operating

The movement is recognized by ADXL335 is used to control the motion of the Wheelchair. Also the accelerometer sensor is calibrated such that it produces particular analog voltage for a corresponding tilt.

2.3 DESIGN AND FABRICATION OF AUTOMATED WHEEL CHAIR FOR QUADRIPLEGIC PATIENTS

Shahida Siddiqui, Sampath S S, Mohammad Asim, Sadoon Azmi, Vikram Shankar, Adnan Ahmad, ChithiraiPon Selvan M "Design and fabrication of automated wheel chair for quadriplegic patients", Volume 6, Issue 2, 2017

The aim of this project is to design a wheel chair that is to be used by Quadriplegics (handicaps unable to use their four limbs). The wheel chair is based on the concept of the head tilt movement which enables the user to move from place to place easily. There are various sensors used in the entire wheel chair to reduce the errors and malfunctions which could take place. This wheel stress on level of comfort, easy mobility, maintenance of gradual and balanced speed based on head tilt movements. The above work studies and focuses on different technologies which are applied for the wheel chair based on different motions associated.

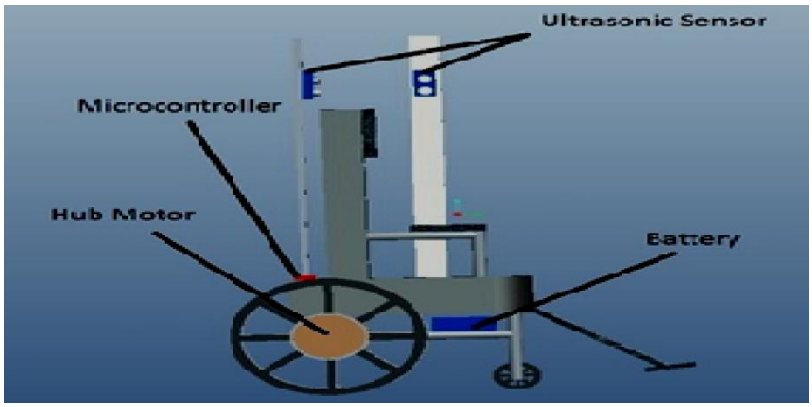

Fig. No. 2.3: Side View of the wheel chair

The proposed wheel chair which is shown in figure 1 is adjusted with two hub-motors on both the wheels to give the wheel chair a better accelerating and twisting power and ability. It also consists of sensors such as pressure sensor in order to limit the chance of an error in case if the patient falls asleep or sneezes. It also has the sensors to detect the head gestures, that is, the motion sensors. Overall the wheel chair automation is done by using head gesture based on the accelerometer and the motion sensors. Microcontroller (program) is mainly used to control the direction of wheel chair. The lightest material is used in order for a better regulation of the speed.

2.4 DESIGN, SIMULATION AND CONSTRUCTION OF AN AUTOMATIC WHEELCHAIR

Hasnayen Ahmed, Kazi Ehsanul Karim, Helal-An-Nahiyan "Design, simulation and construction of an automatic wheelchair", volume 3, Issue 2, December 2015

The proposed wheelchair has been implemented with design, simulation and construction of the whole body. Due to high sustainable stress, low cost and availability, Mild steel has been chosen over Aluminium, Cast iron, Stainless steel for frame material. The constructed wheelchair has a frame; four rear wheels with two shafts units; two front caster wheels for smooth turning and a chain driven gear train for power assist to rear wheel from motor shaft. The Sprocket gear is joined with chain which is connected with another smaller cassette that is mounted directly on motor shaft. In this wheelchair the chain is used to transmit power to drive wheel from the dc gear motor. Whenever the motor shaft rotates then the sprocket of rear spindle starts rotating and thus the wheel starts moving.

Fig. No. 2.5: Constructed automatic wheelchair

The design of the wheelchair and stress & displacement analysis is done by using Solid works 2015 software and the outlook view is generated with Keyshot4 software. Mild steel is used as material for simulation purposes. The design of the wheelchair is done by considering the maximum weight of the person is 100kg. So, the structure of the wheelchair has to be capable of carrying 980N load. Von Mises stress analysis and URES displacements indicate the validation of structure strength, using Mild steel under 980N load.

2.5 AUTOMATIC WHEEL CHAIR CUM BED

Muhammed shafeeque T P, Muhasid P, Shyam M S, Sinto sunny, "Automatic wheel chair cum bed", volume 4, Issue 2, December 2017

The automatic wheel chair cum bed comprises of a wheel chair which can be converted into a complete bed. Automatic wheel chair cum bed can be controlled by joystick, remote control etc. Wheelchair is converting into bed by using lifting mechanism and joystick controllable.A motorized wheel chair or electric-powered wheel chair is a wheel chair that is propelled by means of an electric motor rather than manual power.Motorized wheel chairs are useful for those who are not able to impel a manual wheel chair or who may need to employ a wheel chair for distances or over terrain in a manual wheel chair.

Fig. No. 2.6: wheel chair cum bed

They may also be used not just by people with conventional mobility impairments, but also by people with cardiovascular and fatigue based conditions. Electric wheel chairs have enhanced the quality of life for many people with physical disabilities through the mobility they afford The selection of power chair will rely on many factors; including the kind of surface setting the chair will be driven over, the need to settle thresholds and curbs, and clearance width in accustomed environment.

2.6 DESIGN AND DEVELOPMENT OF AUTOMATIC WHEEL CHAIR AND BED FOR OLD-AGE HOME

Joshi Mohit J, Bhavsar Deep S, Patel Vishal N, Prajapati Mehul P, "Design and development of automatic wheel chair and bed for old-age home", 2014-15

In this paper, design and development of an automated multifunctional Wheelchair that would perform all functions present in today's Wheelchair (Wheelchair with adjustable portion of back rest and leg rest and also convert to bed to wheelchair and vice versa and also remote control with which we can provide all necessary movement) as well as new functions of appropriate Wheelchair sections (leg positions adjusting). It also provide the up and down motion of back and leg portion and also automate (means remote control) forward, backward motion. The motor used for wheelchair for its motion use PMDC

motor (permanent magnet dc motor)andBattery (24 V-150 MAh) which can withstand weight and lift Up to 120 kg.

2.7 DESIGN AND FABRICATION OF STRETCHER CUM WHEELCHAIR

Arunkumar S M, Abhijith P K, Haneepsab A Karoshi, Chetan C, "Design and fabrication of stretcher cum wheelchair",Volume 2, Issue 5, May 2017

In this paper, self excited vibrations one of the most interesting topics in the field of vibrations and is the science prevailing caster wheel shimmy. Self excited vibration is characterized by vibration that is produced by the motion of the system like wheelchair speed. It can be observed that in most of the cheapest wheelchairs, the design of the casters makes use of a sliding frictional damper in the spindle support to improve the shimmy characteristics. Understanding the theory of damping for the casters show how shimmy prevention works in ultra-light and powered wheelchairs. Ratchet mechanism is used for converting wheelchair into stretcher and vice versa. In this model ratchet mechanism is used for lifting and reclining of backrest, but it can carry a load. This model consumes less space as well as less maintenance.

2.8AUTOMATIC WHEELCHAIR USING FLEX SENSOR ABSTRACT

Neha Tiwari, Vishal Arya, Sukesh Kumar, AkshayBhole, "Automatic wheelchair using flex sensor abstract", April 2018

This paper describes an intelligent motorized wheelchair for physically handicapped people using flex sensor technology. Such a wheelchair helps physically handicapped people to navigate without the help of any other individual. It consists of a FLEX SENSOR connected to an Arduino which drives the motor in the desired direction of the operator. To drive the wheelchair use flex commands like forward, backward, left and

right to take it in their respective directions. These directions are controlled by the command valid through Flex Sensor.

FLEX SENSOR produces analog signal i.e, its resistance increases or decreases depending on the direction of bend which is given to the Arduino, the Arduino converts three analog signals into digital using the inbuilt ADC, therefore different ADC values are obtained with different touch positions. Depending on the angle and direction of bend corresponding ADC values are calculated by arduino and the motor moves in the desired direction.

Fig. No. 2.7: Model of automatic wheelchair using flex sensor

Four Flex Sensors allows the wheelchair to move in forward, backward, left and right directions and the crystal oscillator gives clock input and DC motor driver L293D drives the DC motor (wheel) in return thus, giving the wheelchair a movement.

CHAPTER – 3

DESIGN CONSIDERATION

3.1 FACTORS DETERMINING THE CHOICE OF MATERIALS

The various factors which determine the choice of material are discussed below.

3.1.1 Properties

The material selected must possess the necessary properties for the proposed application. The various requirements to be satisfied can be weight, surface finish, rigidity, ability to withstand environmental attack from chemicals, service life, reliability etc. The following four types of principle properties of materials decisively affect their selection

- Physical
- Mechanical
- From manufacturing point of view
- Chemical

The various physical properties concerned are melting point, Thermal Conductivity, Specific heat, coefficient of thermal expansion, specific gravity, electrical Conductivity, Magnetic purposes etc. The various Mechanical properties Concerned are strength in tensile, compressive shear, bending, torsional and buckling load, fatigue resistance, impact resistance, elastic limit, endurance limit, and modulus of elasticity, hardness, wear resistance and sliding properties. The various properties concerned from the manufacturing point of view are.

- Castability
- Weldability
- Brazability
- Forgability
- Merchantability
- Surface properties
- Shrinkage
- Deep drawing etc...

3.1.2 Manufacturing Case:

Sometimes the demand for lowest possible manufacturing cost or surface qualities obtainable by the application of suitable coating substances may demand the use of special materials.

3.1.3 Quality Required:

This generally affects the manufacturing process and ultimately the material. For example, it would never be desirable to go for casting of number of components which can be fabricated much moreeconomically by welding or hand forging the steel.

3.1.4 Availability of Material:

Some materials may be scarce or in short supply. It then becomes obligatory for the designer to use some other material which though may not be a perfect substitute for the material designed. The delivery of materials and the delivery date of product should also be kept in mind.

3.1.5 Space Consideration:

Sometimes high strength materials have to be selected becausethe forces involved are high and the space limitations are there.

3.1.6 Cost:

As in any other problem, in selection of material the cost ofmaterial plays an important part and should not be ignored.Sometimes factors like scrap utilization, appearance, and non-maintenance of the designed part are involved in the selection of propermaterials.

3.2 METHODOLOGY

- Literature study Make review on other model and focusing on how to makeit simple and relevance to the project title.
- Conceptual design sketching several type of design based on concept that being choose. State the dimension for all part.
- Materials Selection Selected the true material based on model design and criteria. Light, easy to joining and easy to manufacture. Assemble all the part to the design Fabrication model refinement. Fabricate according to the main frame and design. Refinement at several part of joining and sharp edge.

- Performance testing.
- Documentation preparinga report for the project.

The proper selection of material for the different part of a machine is the main objective in the fabrication of machine. For a design engineer it is must that he be familiar with the effect, which the manufacturing process and heat treatment have on the properties of materials. The Choice of material for engineering purposes depends upon the following factors:

- Availability of the materials.
- Suitability of materials for the working condition in service.
- The cost of materials.
- Physical and chemical properties of material.

The mechanical properties of the metals are those, which are associated with the ability of the material to resist mechanical forces and load. We shall now discuss these properties as follows:

- Strength : It is the ability of a material to resist the externally applied forces
- Stress: Without breaking or yielding. The internal resistance offered by part to an externally applied force is called stress.
- Stiffness: It is the ability of material to resist deformation under stresses. Themodules of elasticity of the measure of stiffness.

CHAPTER-4

BLOCK DIAGRAM AND WORKING

4.1 Block Diagram

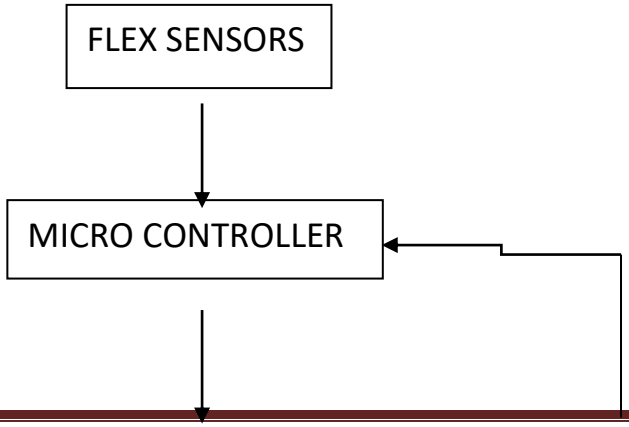

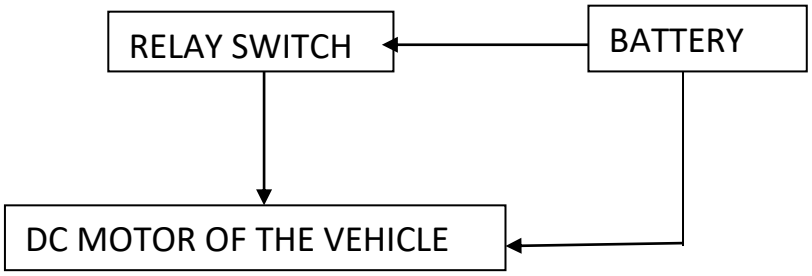

4.2 Working

Flex sensor are resistive sensors that change in resistance depending on the amount of bent on the sensor. This sensor is used to control the direction of wheelchair i.e. left and right. By sending signal to the microcontroller and to the relay switch to activate the motor of the wheel chair.

Driving a wheelchair in domestic environments is a difficult task even for a normal person and becomes even more difficult for people with arms or hands impairments. Some patients who cannot manipulate the direction of the wheelchair with their arms due to a lack of force face major problems such as orientation, mobility etc. Therefore the Robotic wheel chair is developed to overcome the above problems allowing the end-user to just perform safe movements and accomplish some daily life important tasks. This is a dual input type operated wheel chair that is made to work based on flex sensor commands.

This paper describes an intelligent motorized wheelchair for physically handicap person using dependent user controlled by flexes sensor technology. It enables a disable person to move around independently using their fingers or near arms or neck were it as free degree of movements which helps the flex sensor application which interfaces with motor through microcontroller. In this project, to drive the wheelchair we are using flex sensor for individual operations like “forward, backward, maximum, medium, minimum and stop”.

4.3 Arduino Uno

Arduino Uno is a microcontroller board based on 8-bit ATmega328P microcontroller. Along with ATmega328P, it consist other components such as crystal oscillator, serial communication, voltage regulator, etc. to support the microcontroller. Arduino Uno has 14 digital input/output pins (out of which 6 can be used as PWM outputs), 6 analog input pins, a USB connection, A Power barrel jack, an ICSP header and a reset button.

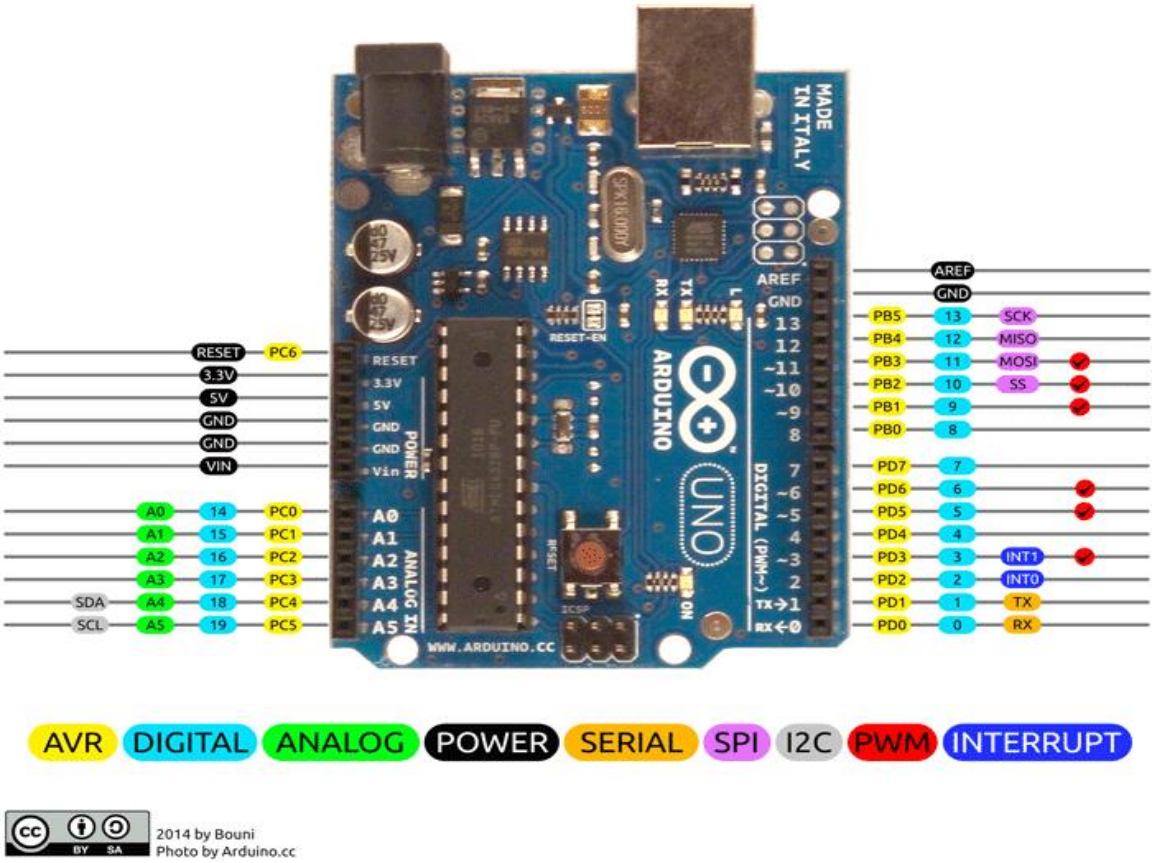

Fig. No. 4.1: Arduino Uno Pin Diagram

4.3.1 How to use Arduino Board

The 14 digital input/output pins can be used as input or output pins by using pin Mode(), digital Read() and digital Write() functions in arduino programming. Each pin operate at 5V and can provide or receive a maximum of 40mA current, and has an internal pull-up resistor of 20-50 KOhms which are disconnected by default. Out of these 14 pins, some pins have specific functions as listed below:

- **Serial Pins 0 (Rx) and 1 (Tx):** Rx and Tx pins are used to receive and transmit TTL serial data. They are connected with the corresponding ATmega328P USB to TTL serial chip.
- **External Interrupt Pins 2 and 3:** These pins can be configured to trigger an interrupt on a low value, a rising or falling edge, or a change in value.
- **PWM Pins 3, 5, 6, 9 and 11:** These pins provide an 8-bit PWM output by using analogWrite() function.
- **SPI Pins 10 (SS), 11 (MOSI), 12 (MISO) and 13 (SCK):** These pins are used for SPI communication.

- **In-built LED Pin 13:** This pin is connected with an built-in LED, when pin 13 is HIGH – LED is on and when pin 13 is LOW, its off.

Along with 14 Digital pins, there are 6 analog input pins, each of which provide 10 bits of resolution, i.e. 1024 different values. They measure from 0 to 5 volts but this limit can be increased by using AREF pin with analog Reference() function.

- Analog pin 4 (SDA) and pin 5 (SCA) also used for TWI communication using Wire library.

Arduino Uno has a couple of other pins as explained below:

- **AREF:** Used to provide reference voltage for analog inputs with analogReference() function.
- **Reset Pin:** Making this pin LOW, resets the microcontroller.

4.3.2Communication

Arduino can be used to communicate with a computer, another Arduino board or other microcontrollers. The ATmega328P microcontroller provides UART TTL (5V) serial communication which can be done using digital pin 0 (Rx) and digital pin 1 (Tx). An ATmega16U2 on the board channels this serial communication over USB and appears as a virtual com port to software on the computer. The ATmega16U2 firmware uses the standard USB COM drivers, and no external driver is needed. However, on Windows, a .inf file is required. The Arduino software includes a serial monitor which allows simple textual data to be sent to and from the Arduino board. There are two RX and TX LEDs on the arduino board which will flash when data is being transmitted via the USB-to-serial chip and USB connection to the computer (not for serial communication on pins 0 and 1). A Software Serial library allows for serial communication on any of the Uno's digital pins. The ATmega328P also supports I2C (TWI) and SPI communication. The Arduino software includes a Wire library to simplify use of the I2C bus.

4.3.4 Arduino Uno to ATmega328 Pin Mapping

When ATmega328 chip is used in place of Arduino Uno, or vice versa, the image below shows the pin mapping between the two.

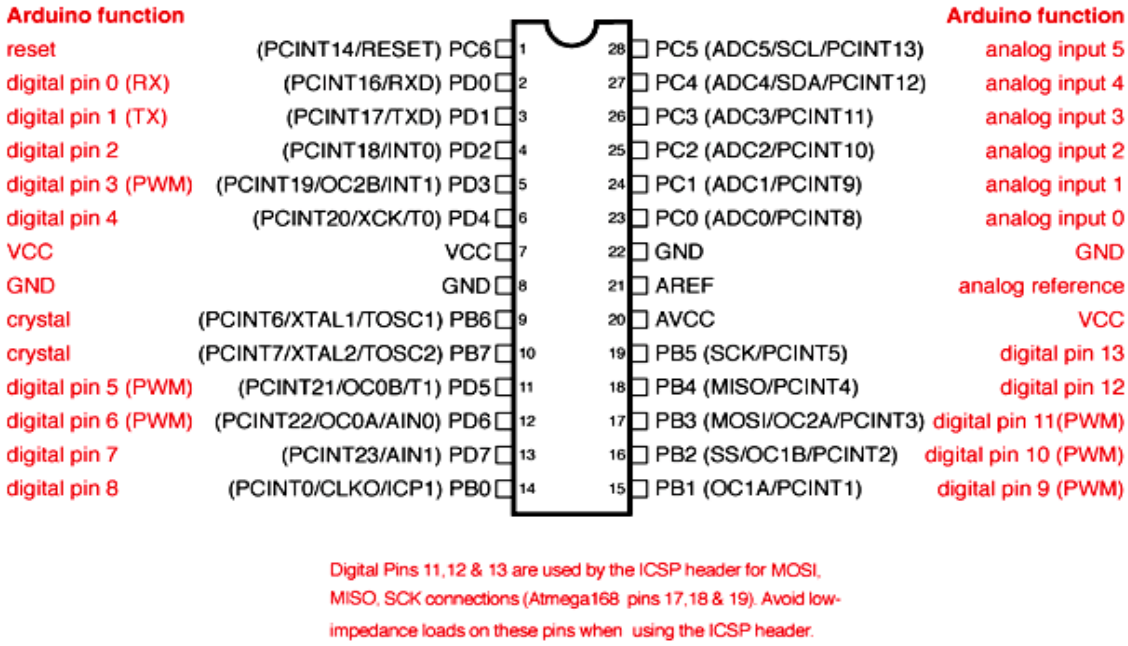

Fig. No. 4.2: Circuit notes of Arduino

4.3.5 Software

Arduino IDE (Integrated Development Environment) is required to program the Arduino Uno board.

4.3.6 Arduino Uno R3 Specifications

The **Arduino Uno R3 board** includes the following specifications.

- It is an ATmega328P based Microcontroller
- The Operating Voltage of the Arduino is 5V
- The recommended input voltage ranges from 7V to 12V
- The i/p voltage (limit) is 6V to 20V
- Digital input and output pins-14
- Digital input & output pins (PWM)-6
- Analog i/p pins are 6
- DC Current for each I/O Pin is 20 mA
- DC Current used for 3.3V Pin is 50 mA
- Flash Memory -32 KB, and 0.5 KB memory is used by the boot loader
- SRAM is 2 KB
- EEPROM is 1 KB
- The speed of the CLK is 16 MHz
- In Built LED
- Length and width of the Arduino are 68.6 mm X 53.4 mm

- The weight of the Arduino board is 25 g

4.4 Relay

In shows are a relay is an electrically operated switch. Several relays use a magnet to automatically operate a switch, however alternative in operation principles are used, like solid state relays. Relays are used wherever it's necessary to regulate a circuit by a separate low-power signal, or wherever many circuits should be controlled by one signal.

Fig. No. 4.3: Dual Channel Relay Module

A relay is basically a switch which is operated by an electromagnet. The electromagnet requires a small voltage to get activated which we will give from the Arduino and once it is activated, it will pull the contact to make the high voltage circuit.

The relay module we are going to use is the5v relay. It runs on 5V and we can control it with any micro-controller but we are going to use Arduino.The Arduino relay module has total of six pins: three on one side and three on other side.On the bottom side, there are three pins which are signal,5V and ground. We will connect these pins with the Arduino. While on the other side, there are NC (Normally close), C (Common) and the NO (normally open) which are the output pins of the 5V relay. There, we will connect the output device.

4.5Normally open state (NO) VS Normally closed state (NC)

The Arduino relay module can be used in two states which are

- Normally open state (NO)
- Normally closed state (NC)

4.5.1 Normally open (NO)

In the normally open state, the initial output of the relay will be low when it will be powered. In this state, the common and the normally open pins are used.

4.5.2 Normally closed state (NC)

In the normally closed state, the initial output of the relay will be high when it will be powered. In this state, the common and the normally close pins are used.

4.6Flex sensors

Flex sensors are usually available in two sizes. One is **2.2 inch** and another is **4.5 inch**. Although the sizes are different the basic function remains the same. They are also divided based on resistance. There are LOW resistance, MEDIUM resistance and HIGH resistance types. Choose the appropriate type depending on requirement. Here we are going to discuss 2.2inch Flex sensor that is **FS-L-0055**.

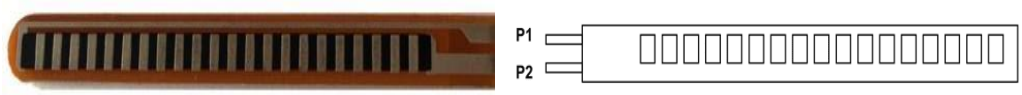

Fig. No. 4.4: Flex Sensor

4.6.1 FLEX SENSOR function

FLEX SENSOR terminal resistance changes when it is bent.

4.6.2 FLEX SENSOR Pin Configuration

Flex sensor is a two terminal device. The Flex sensor does not have polarized terminals like diode. So there is no positive and negative.

Pin Number	Description
P1	Usually connected to positive of power source.
P2	Usually connected to ground.

4.6.3 FLEX SENSOR Features and Specifications

- Operating voltage of FLEX SENSOR: 0-5V
- Can operate on LOW voltages
- Power rating : 0.5Watt (continuous), 1 Watt (peak)
- Life: 1 million
- Operating temperature: -45ºC to +80ºC
- Flat Resistance: 25K Ω
- Resistance Tolerance: ±30%
- Bend Resistance Range: 45K to 125K Ohms(depending on bend)

FS-L-0055 Equivalents

FS-L-0095, FS-L-0112, etc

4.6.4 Where to Use FLEX SENSOR

For understanding the uses of FLEX SENSOR consider:

Case1: Where you want to check whether the surface of a device or thing is levelled or not. Say you want a device to check whether a window or door is open or not. At that time a Flex sensor could be used. The sensor could be fixed at door edge and when the door opens the Flex sensor gets flexed. With the sensor being flexed its parameters changes which could be designed to provide an alert.

Case2: Where you want to measure the FLEX or BENT or ANGLE change of any instrument or device. The FLEX SENSOR internal resistance changes almost linearly with its flex angle. So by sticking the sensor to the instrument we can have the flex angle in electrical parameter of resistance.

4.6.5 How to Use FLEX SENSOR

As mentioned earlier, **FLEX SENSOR** is basically a **VARIABLE RESISTOR** whose terminal resistance increases when the sensor is bent. So this sensor resistance increases depends on surface linearity. So it is usually used to sense the changes in linearity.

As shown above figure, when the surface of FLEX SENSOR is completely linear it will be having its nominal resistance. When it is bent 45º angle the FLEX SENSOR resistance

increases to twice as before. And when the bent is 90º the resistance could go as high as four times the nominal resistance. So the resistance across the terminals rises linearly with bent angle. So in a sense the FLEX sensor converts flex angle to RESISTANCE parameter.

For convenience we convert this RESISTANCE parameter to VOLTAGE parameter. For that we are going to use **VOLTAGE DIVIDER circuit**. A typical VOLTAGE DIVIDER circuit is shown below.

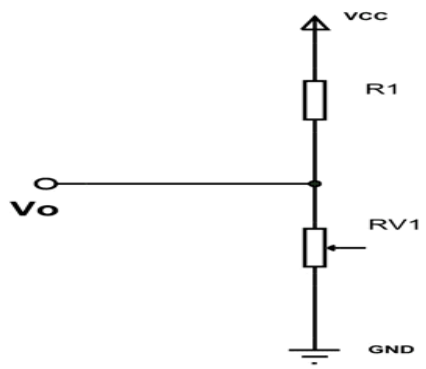

Fig. No. 4.5: Voltage Divider circuit

In this resistive network we have two resistances. One is constant resistance (R1) and other is variable resistance (RV1). Vo is the voltage at midpoint of VOLTAGE DIVIDER circuit and is also the output voltage. Vo is also the voltage across the variable resistance (RV1). So when the resistance value of RV1 is changed the output voltage Vo also changes. So we will have resistance change in voltage change with VOLTAGE DIVIDER circuit. Here we will replace the variable resistance (RV1) with FLEX SENSOR. The circuit will be as below.

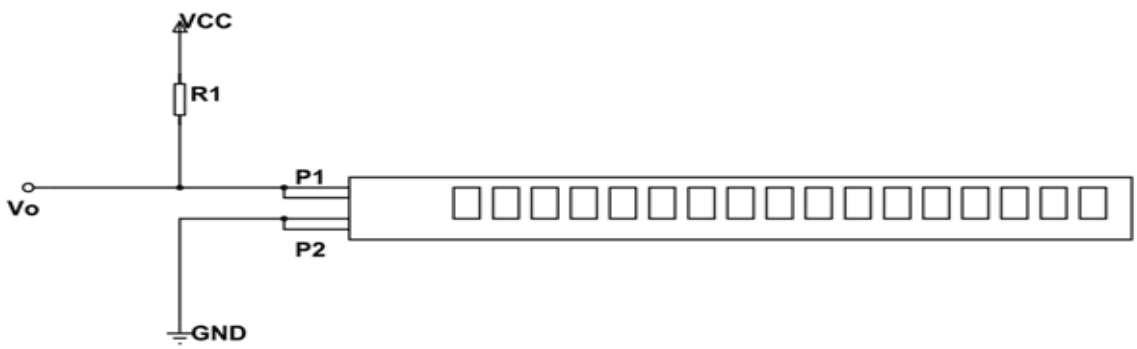

As shown in figure, R1 here is a constant resistance and **FLEX SENSOR** which acts as a variable resistance. Vo being output voltage and also the voltage across the FLEX SENSOR.

Here,

Vo=VCC(Rx/(R1+Rx)).

Rx - FLEX SENSOR resistance

Now, when the FLEX SENSOR is bent the terminal resistance increases. This increase also appears in VOLTAGE DIVIDER circuit. With that the drop across the FLEX SENSOR increases so is Vo. So with increase in bent of FLEX sensor Vo voltage increases linearly with thatVOLTAGE parameter representing the flex. This VOLTAGE parameter and feed it to ADC to get the digital value which can be used conveniently.

4.6.6 Applications of Flex sensor

- Robotics
- Gaming (Virtual Motion)
- Medical Devices
- Computer Peripherals
- Musical Instruments
- Physical Therapy

CHAPTER-5

COMPONENTS AND DESCRIPTION

The major components are:

- BATTERY
- D.C. MOTOR
- SOLAR PANEL
- BALL BEARINGS
- CHAIN AND SPROCKET
- ARDUINO CONTROLLER

- RELAYS
- FLEX SENSOR

5.1 BATTERY:

In isolated systems away from the grid, batteries are used for storage of excess solar energy converted into electrical energy. The only exceptions are isolated sunshine load such as irrigation pumps or drinking water supplies for storage. In fact for small units with output less than one kilowatt. Batteries seem to be the only technically and economically available storage means. Since both the photo-voltaic system and batteries are high in capital costs.

It is necessary that the overall system be optimized with respect to available energy and local demand pattern. To be economically attractive the storage of solar electricity requires a battery with a particular combination of properties:

- Low cost
- Long life
- High reliability
- High overall efficiency
- Low discharge
- Minimum maintenance
    a. Ampere hour efficiency
    b. Watt hour efficiency

We use lead acid battery for storing the electrical energy from the solar panel for lighting the street and so about the lead acid cells are explained below.

5.1.1 LEAD-ACID WET CELL:

Where high values of load current are necessary, the lead-acid cell is the type most commonly used. The electrolyte is a dilute solution of sulphuric acid (H_2SO_4).

In the application of battery power to start the engine in an auto mobile, for example, the load current to the starter motor is typically 200 to 400A. One cell has a nominal output of 2.1V, but lead-acid cells are often used in a series combination of three for a 6-V battery and six for a 12-V battery.

The lead acid cell type is a secondary cell or storage cell, which can be recharged. The charge and discharge cycle can be repeated many times to restore the output voltage, as long as the cell is in good physical condition. However, heat with excessive charge and discharge currents shortends the useful life to about 3 to 5 years for an automobile battery. Of the different types of secondary cells, the lead-acid type has the highest output voltage, which allows fewer cells for a specified battery voltage.

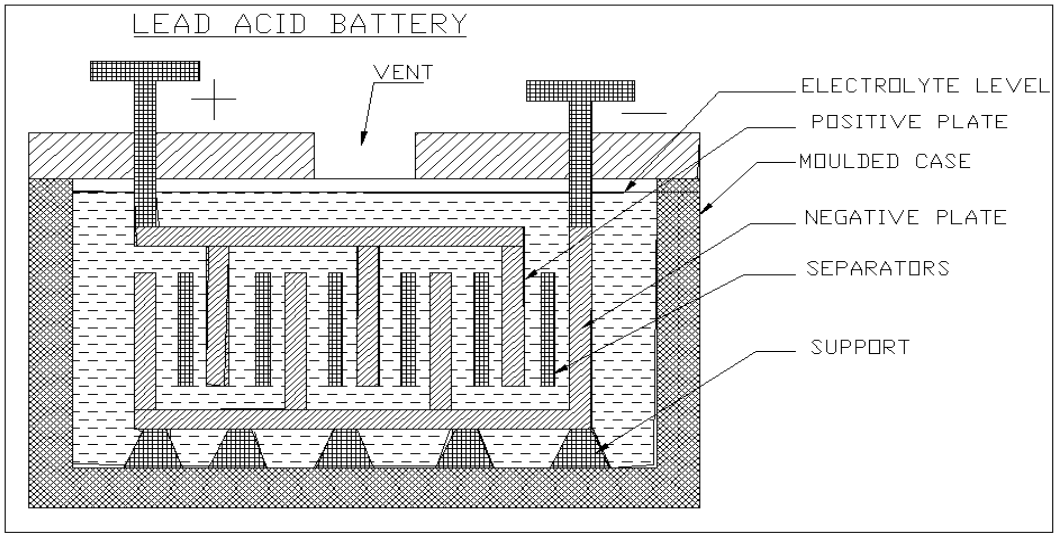

Fig. No. 5.1: Schematic representation of Lead-Acid Battery

5.1.2 CONSTRUCTION:

Inside a lead-acid battery, the positive and negative electrodes consist of a group of plates welded to a connecting strap. The plates are immersed in the electrolyte, consisting of 8 parts of water to 3 parts of concentrated sulphuric acid. Each plate is a grid or framework, made of a lead-antimony alloy. This construction enables the active material, which is lead oxide, to be pasted into the grid. In manufacture of the cell, a forming charge produces thepositive and negative electrodes. In the forming process, the active material in the positive plate is changed to lead peroxide (pbo_2). The negative electrode is spongy lead (pb).

Automobile batteries are usually shipped dry from the manufacturer. The electrolyte is put in at the time of installation, and then the battery is charged to from the plates. With maintenance-free batteries, little or no water need be added in normal service. Some types are sealed, except for a pressure vent, without provision for adding water.The construction parts of battery are shown in figure.

5.1.3 CHEMICAL ACTION:

Sulphuric acid is a combination of hydrogen and sulphate ions. When the cell discharges, lead peroxide from the positive electrode combines with hydrogen ions to form water and with sulphate ions to form lead sulphate. Combining lead on the negative plate with sulphate ions also produces he sulphate. Therefore, the net result of discharge is to produce more water, which dilutes the electrolyte, and to form lead sulphate on the plates.

As the discharge continues, the sulphate fills the pores of the grids, retarding circulation of acid in the active material. Lead sulphate is the powder often seen on the outside terminals of old batteries. When the combination of weak electrolyte and sulphating on the plate lowers the output of the battery, charging is necessary.

On charge, the external D.C. source reverses the current in the battery. The reversed direction of ions flows in the electrolyte result in a reversal of the chemical reactions. Now the lead sulphate on the positive plate reactive with the water and sulphate ions to produce lead peroxide and sulphuric acid. This action re-forms the positive plates and makes the electrolyte stronger by adding sulphuric acid.

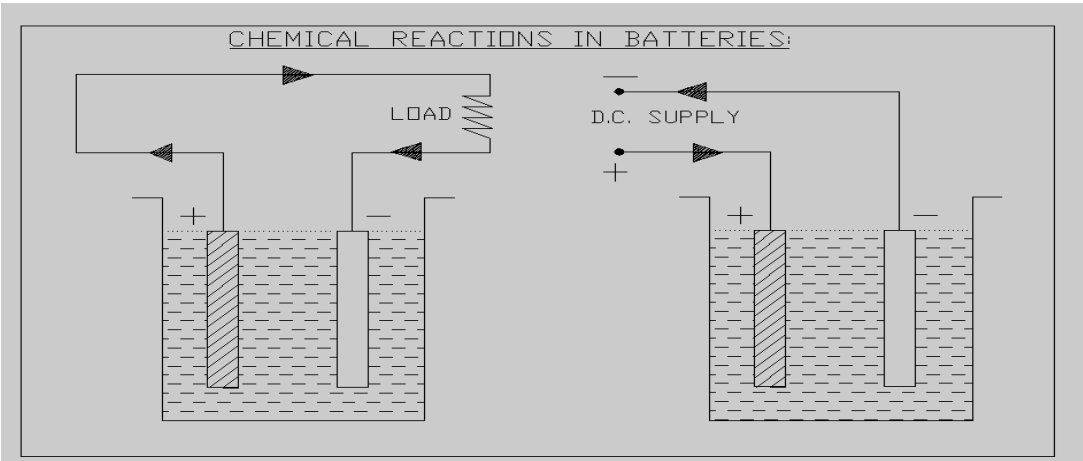

Fig. No. 5.2: Chemical Reaction in Battery

At the same time, charging enables the lead sulphate on the negative plate to react with hydrogen ions; this also forms sulphuric acid while reforming lead on the negative plate to react with hydrogen ions; this also forms currents can restore the cell to full output, with lead peroxide on the positive plates, spongy lead on the negative plate, and the required concentration of sulphuric acid in the electrolyte. The chemical equation for the lead-acid cell is ChargeDischarge.

$$Pb + pbO_2 + 2H_2SO_4 \longrightarrow 2pbSO_4 + 2H_2O$$

On discharge, the pb and pbo_2 combine with the SO_4 ions at the left side of the equation to form lead sulphate ($pbSO_4$) and water (H_2O) at the right side of the equation.

One battery consists of 6 cells, each have an output voltage of 2.1V, which are connected in series to get a voltage of 12V and the same 12V battery is connected in series, to get an 24 V battery. They are placed in the water proof iron casing box.

5.1.4 CARING FOR LEAD-ACID BATTERIES:

Always use extreme caution when handling batteries and electrolyte. Wear gloves, goggles and old clothes. "Battery acid" will burn skin and eyes and destroy cotton and wool clothing.

The quickest way of ruin lead-acid batteries is to discharge them deeply and leave them stand "dead" for an extended period of time. When they discharge, there is a chemical change in the positive plates of the battery. They change from lead oxide when charge out lead sulphate when discharged. If they remain in the lead Sulphate State for a few days, some part of the plate dose not returns to lead oxide when the battery is recharged. If the battery remains discharge longer, a greater amount of the positive plate will remain lead sulphate. The parts of the plates that become "sulphate" no longer store energy. Batteries that are deeply discharged, and then charged partially on a regular basis can fail in less than one year.

Check batteries on a regular basis to be sure they are getting charged. Use a hydrometer to check the specific gravity of your lead acid batteries. If batteries are cycled very deeply and then recharged quickly, the specific gravity reading will be lower than it should because the electrolyte at the top of the battery may not have mixed with the "charged" electrolyte. Check the electrolyte level in the wet-cell batteries at the least four times a year and top each cell of with distilled water. Do not add water to discharged batteries. Electrolyte is absorbed when batteries are much discharged. If you add water at this time, and then recharge the battery, electrolyte will overflow and make a mess.

Keep the top of your batteries clean and check that cables are tight. Do not tighten or remove cables while charging or discharging. Any spark around batteries can cause a hydrogen explosion inside, and ruin one of the cells. On charge, with reverse current through the electrolyte, the chemical action is reversed. Then the pb ions from the lead sulphate on the right side of the equation re-form the lead and lead peroxide electrodes.

Also the SO_4 ions combine with H_2 ions from the water to produce more sulphuric acid at the left side of the equation.

5.1.5CURRENT RATINGS:

Lead-acid batteries are generally rated in terms of how much discharge currents they can supply for a specified period of time; the output voltage must be maintained above a minimum level, which is 1.5 to 1.8V per cell. A common rating is ampere-hours (A.h.) based on a specific discharge time, which is often 8h. Typical values for automobile batteries are 100 to 300 A.h.

As an example, a 200 A.h battery can supply a load current of 200/8 or 25A, used on 8h discharge. The battery can supply less current for a longer time or more current for a shorter time. Automobile batteries may be rated for "cold cranking power", which is related to the job of starting the engine. A typical rating is 450A for 30s at a temperature of 0 degree F.Note that the ampere-hour unit specifies coulombs of charge. For instance, 200 A.h. corresponds to 200A*3600s (1h=3600s). The equals 720,000 A.S, or coulombs. One ampere-second is equal to one coulomb. Then the charge equals 720,000 or 7.2*10^5ºC. To put this much charge back into the battery would require 20 hours with a charging current of 10A.

The ratings for lead-acid batteries are given for a temperature range of 77 to 80ºF. Higher temperature increase the chemical reaction, but operation above 110ºF shortens the battery life.

Low temperatures reduce the current capacity and voltage output. The ampere-hour capacity is reduced approximately 0.75% for each decreases of 1º F below normal temperature rating. At 0ºF the available output is only 60 % of the ampere-hour battery rating. In cold weather, therefore, it is very important to have an automobile battery unto full charge. In addition, the electrolyte freezes more easily when diluted by water in the discharged condition.

5.1.6 SPECIFIC GRAVITY:

Measuring the specific gravity of the electrolyte generally checks the state of discharge for a lead-acid cell. Specific gravity is a ratio comparing the weight of a substance with the weight of a substance with the weight of water. For instance, concentrated sulphuric acid is 1.835 times as heavy as water for the same volume. Therefore, its specific gravity equals 1.835. The specific gravity of water is 1, since it is the reference.

In a fully charged automotive cell, mixture of sulphuric acid and water results in a specific gravity of 1.280 at room temperatures of 70 to 80ºF. As the cell discharges, more water is formed, lowering the specific gravity. When it is down to about 1.150, the cell is completely discharged.

Specific-gravity readings are taken with a battery hydrometer. Note that the calibrated float with the specific gravity marks will rest higher in an electrolyte of higher specific gravity.

The decimal point is often omitted for convenience. For example, the value of 1.220 is simply read "twelve twenty". A hydrometer reading of 1260 to 1280 indicates full charge, approximately 12.50 are half charge, and 1150 to 1200 indicates complete discharge.The importance of the specific gravity can be seen from the fact that the open-circuit voltage of the lead-acid cell is approximately equal to

V= Specific gravity + 0.84

For the specific gravity of 1.280, the voltage is 1.280 = 0.84 = 2.12V, as an example. These values are for a fully charged battery.

5.1.7 CHARGING THE LEAD-ACID BATERY:

The requirements are illustrated in figure. An external D.C. voltage source is necessary to produce current in one direction. Also, the charging voltage must be more than the battery e.m.f. Approximately 2.5 per cell are enough to over the cell e.m.f. so that the charging voltage can produce current opposite to the direction of discharge current.

Note that the reversal of current is obtained just by connecting the battery VB and charging source VG with + to + and –to-, as shown in figure. The charging current is reversed because the battery effectively becomes a load resistance for VG when it higher than VB. In this example, the net voltage available to produce charging currents is 15-12=3V.A commercial charger for automobile batteries is essentially a D.C. power supply, rectifying input from the AC power line to provide D.C. output for charging batteries.

Float charging refers to a method in which the charger and the battery are always connected to each other for supplying current to the load. It may be of interest to note that an automobile battery is in a floating-charge circuit. The battery charger is an AC generator or alternator with rectifier diodes, driver by a belt from the engine. When you start the car, the battery supplies the cranking power. Once the engine is running, the

alternator charges the battery. It is not necessary for the car to be moving. A voltage regulator is used in this system to maintain the output at approximately 13 to 15 V. The constant voltage of 24V comes from the solar panel controlled by the charge controller so for storing this energy we need a 24V battery so two 12V battery are connected in series.

It is a good idea to do an equalizing charge when some cells show a variation of the 0.05 specific gravity from each other. This is a long steady overcharge, bringing the battery to a gassing or bubbling state. Do not equalize sealed or gel type batteries.With proper care, lead-acid batteries will have a long service life and work very well in almost any power system. Unfortunately, with poor treatment lead-acid battery life will be very short.

5.2 D.C. MOTOR (PERMANENT MAGNET):

5.2.1 DESCRIPTION OF DC MOTOR

An electric motor is a machine which converts electrical energy to mechanical energy. Its action is based on the principle that when a current-carrying conductor is placed in a magnetic field, it experiences a magnetic force whose direction is given by Fleming's left hand rule.When a motor is in operation, it develops torque. This torque can produce mechanical rotation. DC motors are also like generators classified into shunt wound or series wound or compound wound motors.

5.2.2 FLEMING'S LEFT HAND RULE:

Keep the force finger, middle finger and thumb of the left hand mutually perpendicular to one another. If the fore finger indicates the direction of magnetic field and middle fingerindicates direction of current in the conductor, then the thumb indicates the direction of the motion of conductor.

5.2.3 PRINCIPLE OF OPERATION OF DC MOTOR:

Figure I show a uniform magnetic field in which a straight conductor carrying no current is placed. The conductor is perpendicular to the direction of the magnetic field. In figure II the conductor is shown as carrying a current away from the viewer, but the field due to the N and S poles has been removed. There is no movement of the conductor during the above two conditions. In figure III the current carrying conductor is placed in the magnetic field. The field due to the current in the conductor supports the main field above the conductor, but opposes the main field below the conductor.

5.2.3.1 Movement ofConductor

The result is to increase the flux density in to the region directly above the conductor and to reduce the flux density in the region directly below the conductor. It is found that a force acts on the conductor, trying to push the conductor downwards as shown by the arrow. If the current in the conductor is reversed, the strengthening of flux lines occurs below the conductor, and the conductor will be pushed upwards.

Now consider a single turn coil carrying a current as shown in the above figure. in view of the reasons given above, the coil side A will be forced to move downwards, whereas the coil side B will be forced to move upwards. The forces acting on the coil sides A and B will be of same magnitude. But their direction is opposite to one another. As the coil is wound on the armature core which is supported by the bearings, the armature will now rotate. The commutator periodically reverses the direction of current flow through the armature. Therefore the armature will have a continuous rotation.

The conductors are wound over a soft iron core. DC supply is given to the field poles for producing flux. The conductors are connected to the DC supply through brushes

Let's start by looking at the overall plan of a simple 2-pole DC electric motor. A simple motor has 6 parts, as shown in the diagram below.

- An armature or rotor
- A commutator
- Brushes
- An axle
- A field magnet
- A DC power supply of some sort

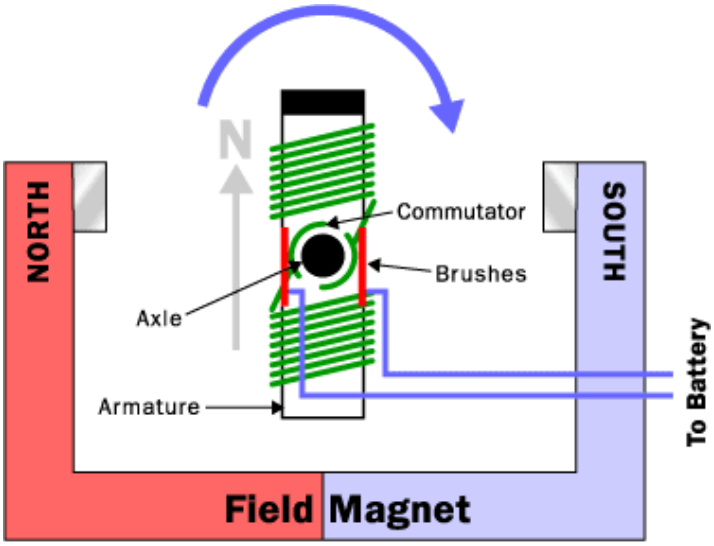

Fig. No. 5.3: Schematic Representation of electric motor

An electric motor is all about magnets and magnetism: a motor uses magnets to create motion. If you have ever played with magnets you know about the fundamental law of all magnets: Opposites attract and likes repel. So if you have 2 bar magnets with their ends marked north and south, then the North end of one magnet will attract the South end of the other. On the other hand, the North end of one magnet will repel the North end of the other (and similarly south will repel south). Inside an electric motor these attracting and repelling forces create rotational motion.

In the diagram above and below you can see two magnets in the motor, the armature (or rotor) is an electromagnet, while the field magnet is a permanent magnet (the field magnet could be an electromagnet as well, but in most small motors it is not to save power).

5.2.3.2Electromagnets and Motors:

To understand how an electric motor works, the key is to understand how the electromagnet works. An electromagnet is the basis of an electric motor. You can understand how things work in the motor by imagining the following scenario. Say that you created a simple electromagnet by wrapping 100 loops of wire around a nail and connecting it to a battery. The nail would become a magnet and have a North and South pole while the battery is connected. Now say that you take your nail electromagnet, run an axle through the middle of it, and you suspended it in the middle of a horseshoe magnet as shown in the figure below. If you were to attach a battery to the electromagnet so that the North end of the nail appeared as shown, the basic law of magnetism tells

you .The North end of the electromagnet would be repelled from the north end of the horseshoe magnet and attracted to the south end of the horseshoe magnet. The South end of the electromagnet would be repelled in a similar way. The nail would move about half a turn and then stop in the position shown.

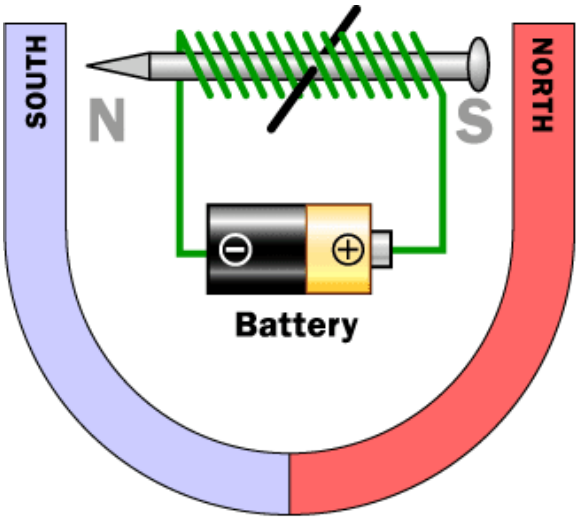

Fig. No. 5.4: Simple Electro-magnet

The way magnets naturally attract and repel one another. The key to an electric motor is to then go one step further so that, at the moment that this half-turn of motion completes, the field of the electromagnet flips. The flip causes the electromagnet to complete another half-turn of motion. Flip the magnetic field simply by changing the direction of the electrons flowing in the wire (you do that by flipping the battery over). If the field of the electromagnet flipped at just the right moment at the end of each half-turn of motion, the electric motor would spin freely.

5.2.3.3Armature:

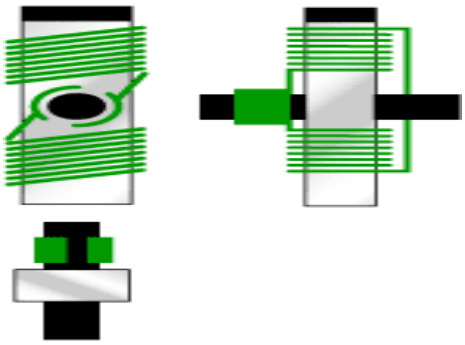

Fig. No. 5.5: Armature

The armature takes the place of the nail in an electric motor. The armature is an electromagnet made by coiling thin wire around two or more poles of a metal core. The armature has an axle, and the commutator is attached to the axle.

In the diagram above you can see three different views of the same armature: front, side and end-on. In the end-on view the winding is eliminated to make the commutator more obvious. You can see that the commutator is simply a pair of plates attached to the axle. These plates provide the two connections for the coil of the electromagnet.

5.2.3.4The Commutator and brushes:

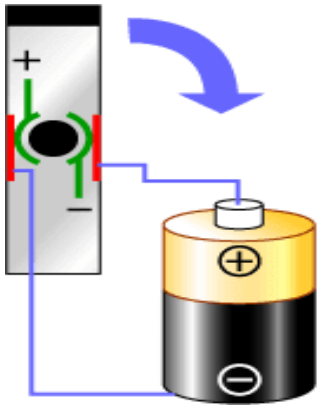

Fig. No. 5.6: Commutator

The "flipping the electric field" part of an electric motor is accomplished by two parts: the **commutator** and the **brushes**. The diagram at the right shows how the commutator and brushes work together to let current flowthe electromagnet, and also to flip the direction that the electrons are flowing at just the right moment. The contacts of the commutator are attached to the axle of the electromagnet, so they spin with the magnet. The brushes are just two pieces of springy metal or carbon that make contact with the contacts of the commutator.

5.2.3.5 Puttingit All Together:

In below figure, the armature winding has been left out so that it is easier to see the commutator in action. The key thing to notice is that as the armature passes through the horizontal position, the poles of the electromagnet flip. Because of the flip, the North Pole of the electromagnet is always above the axle so it can repel the field magnet's North Pole and attract the field magnet's South Pole.

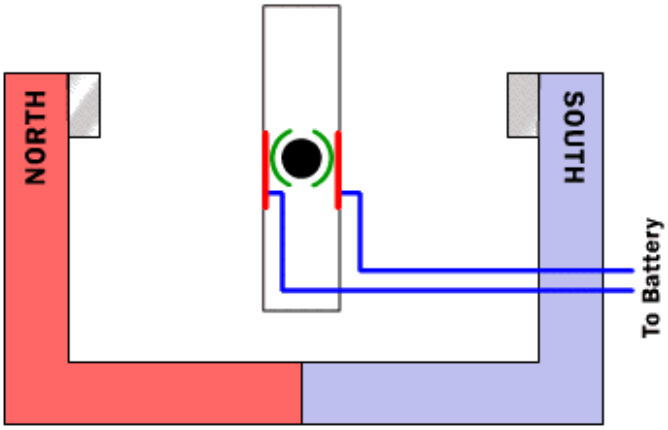

Fig. No. 5.7: Action of Commutator

If you ever take apart an electric motor you will find that it contains the same pieces described above: two small permanent magnets, a commutator, two brushes and an electromagnet made by winding wire around a piece of metal. Almost always, however, the rotor will have three poles rather than the two poles as shown in this article. There are two good reasons for a motor to have three poles:

- It causes the motor to have better dynamics. In a two-pole motor, if the electromagnet is at the balance point, perfectly horizontal between the two poles of the field magnet when the motor starts; you can imagine the armature getting "stuck" there. That never happens in a three-pole motor.

- Each time the commutator hits the point where it flips the field in a two-pole motor, the commutator shorts out the battery (directly connects the positive and negative terminals) for a moment. This shorting wastes energy and drains the battery needlessly. A three-pole motor solves this problem as well.

- It is possible to have any number of poles, depending on the size of the motor and the specific application it is being used in.

5.3Mild Steel Material:

General purpose steel bars for machining suitable for lightly stressed components including studs, bolts, gears and shafts. Often specified where weld ability is a requirement can be case-hardened to improve wear resistance. Available in bright

rounds, squares and flats, and hot rolled rounds. Can be supplied in sawn blanks, and bespoke size blocks

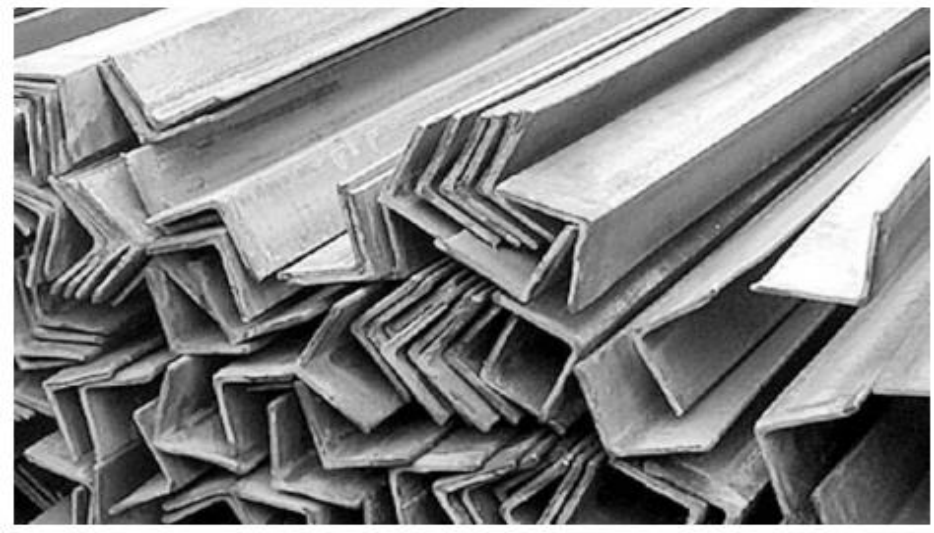

Fig. No. 5.8: Mild steel material

Mild steel is a carbon steel typically with a maximum of 0.25% Carbon and 0.4%-0.7% manganese, 0.1%-0.5% Silicon and some + traces of other elements such as phosphorous, it may also contain lead (free cutting mild steel) or sulphur (again free cutting steel called resulphurised mild steel) The stuff is used everywhere, looking out of my office window. I can see in diesel pump injector parts, loudspeaker pole pieces, automated packing machinery parts and I haven't even got my glasses on. How it’s made and more info, depending upon the age of your son it's probably an idea he spends a Saturday morning at the local library researching his homework. Whilst the internet's good you still can't beat browsing through books at the library for homework.

5.4Nut and Bolt:

Fig. No. 5.9: Nut and Bolt

A nut is a type of fastener with a threaded hole. Nuts are almost always used in conjunction with a mating bolt to fasten two or more parts together. The two partners are kept together by a combination of their threads' friction (with slight elastic deformation), a slight stretching of the bolt, and compression of the parts to be held together. In applications where vibration or rotation may work a nut loose, various locking mechanisms may be employed: lock washers, jam nuts, specialist adhesive thread-locking fluid such as Loctite, safety pins (split pins) or lockwire in conjunction with castellated nuts, nylon inserts (Nylon nut), or slightly oval-shaped threads. The most common shape is hexagonal, for similar reasons as the bolt head - 6 sides give a good granularity of angles for a tool to approach from (good in tight spots), but more (and smaller) corners would be vulnerable to being rounded off. It takes only 1/6th of a rotation to obtain the next side of the hexagon and grip is optimal. However polygons with more than 6 sides do not give the requisite grip and polygons with fewer than 6 sides take more time to be given a complete rotation.

5.5 BALL BEARING:

The bearings are pressed smoothly to fit into the shafts because if hammered the bearing may develop cracks. Bearing is made upon steel material and bearing cap is mild steel. Ball and roller bearings are used widely in instruments and machines in order to minimize friction and power loss. While the concept of the ball bearing dates back at least to Leonardo da Vinci, their design and manufacture has become remarkably sophisticated. This technology was brought to its p resent state o f perfection only after a long period of research and development. The benefits of such specialized research can be obtained when it is possible to use a standardized bearing of the proper size and type. However, such bearings cannot be used indiscriminately without a careful study of the loads and operating conditions. In addition, the bearing must be provided with adequate mounting, lubrication and sealing. Design engineers have usually two possible sources for obtaining information which they can use to select a bearing for their particular application:

a) Textbooks
b) Manufacturers

Catalogs Textbooks are excellent sources; however, they tend to be overly detailed and aimed at the student of the subject matter rather than the practicing designer. They, in most cases, contain information on how to design rather than how to select a bearing for a particular application. Manufacturerscatalogs, in turn, are also excellent and contain a wealth of information which relates to the products of the particular manufacturer. These

catalogs, however, fail to provide alternatives – which may divert the designer's interest to products not manufactured by them. Our Company, however, provides the broadest selection of many types of bearings made by different manufacturers.

5.5.1 Construction and Types of Ball Bearings:

A ball bearing usually consists of four parts: an inner ring, an outer ring, the balls and the cage or separator. To increase the contact area and permit larger loads to be carried, the balls run in curvilinear grooves in the rings. The radius of the groove is slightly larger than the radius of the ball, and a very slight amount of radial play must be provided. The bearing is thus permitted to adjust itself to small amounts of angular misalignment between the assembled shaft and mounting. The separator keeps the balls evenly spaced and prevents them from touching each other on the sides where their relative velocities are the greatest. Ball bearings are made in a wide variety of types and sizes. Single-row radial bearings are made in four series, extra light, light, medium, and heavy, for each bore.

The heavy series of bearings is designated by 400. Most, but not all, manufacturers use a numbering system so devised that if the last two digits are multiplied by 5, the result will be the bore in millimetres.

The digit in the third place from the right indicates the series number. Thus, bearing 307 signifies a medium-series bearing of 35-mm bore.

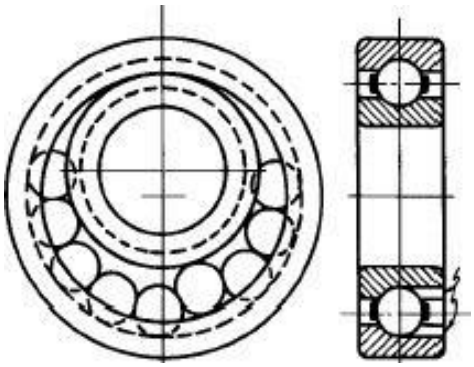

Fig. No.5.10: Ball Bearing

Some makers list deep groove bearings and bearings with two rows of balls. For bearing designations of Quality Bearings &Components (QBC), see special pages devoted to this purpose. The radial bearing is able to carry a considerable amount of axial thrust. However, when the load is directed entirely along the axis, the thrust type of bearing should be used. The angular contact bearing will take care of both radial and axial loads. The self-aligning ball bearing will take care of large amounts of angular

misalignment. An increase in radial capacity may be secured by using rings with deep grooves, or by employing a double-row radial bearing. Radial bearings are divided into two general classes, depending on the method of assembly. These are the Conrad, or no filling-notch type, and the maximum or filling-notch type. In the Conrad bearing, the balls are placed between the rings. Then they are evenly spaced and the separator is riveted in place. In the maximum-type bearing, the balls are a (a) (b) (c) (d) (e) (f) 100 Series Extra Light 200 Series Light 300 Series Medium Axial Thrust Bearing Angular Contact Bearing Self-aligning Bearing, This is a cycle chain sprocket. The chain sprocket is coupled with another generator shaft. The chain converts rotational power to pulling power, or pulling power to rotational power, by engaging with the sprocket.

The sprocket looks like a gear but differs in three important ways:

1. Sprockets have many engaging teeth; gears usually have only one or two.
2. The teeth of a gear touch and slip against each other; there is basically no slippage in a sprocket.
3. The shape of the teeth is different in gears and sprockets.

5.6SPROCKET AND CHAIN DRIVE:

5.6.1 Types of Sprockets:

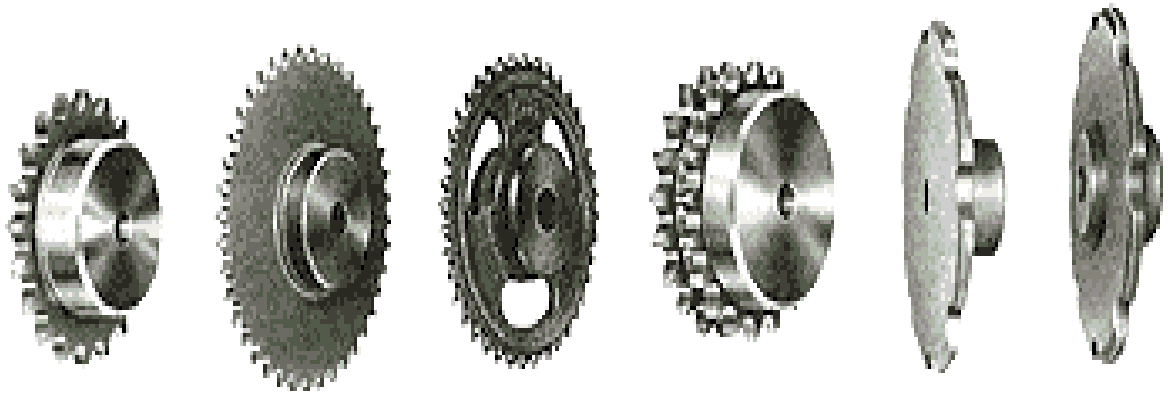

Fig. No. 5.11: Types of Sprocket

5.6.1.1 Engagement with Sprockets:

Although chains are sometimes pushed and pulled at either end by cylinders, chains are usually driven by wrapping them on sprockets. In the following section, we explain the relation between sprockets and chains when power is transmitted by sprockets.

5.6.1.2 Back tension:

First, let us explain the relationship between flat belts and pulleys. Figure shows a rendition of a flat belt drive. The circle at the top is a pulley, and the belt hangs down from each side. When the pulley is fixed and the left side of the belt is loaded with tension (T0), the force needed to pull the belt down to the right side will be:

T1 = T0 3 eμu

For example, T0 = 100 N: the coefficient of friction between the belt and pulley, μ = 0.3; the wrap angle u = ¼ (180).

T1 = T0 3 2.566 = 256.6 N

In brief, when you use a flat belt in this situation, you can get 256.6 N of drive power only when there is 100 N of back tension. For elements without teeth such as flat belts or ropes, the way to get more drive power is to increase the coefficient of friction or wrapping angle. If a substance, like grease or oil, which decreases the coefficient of friction, gets onto the contact surface, the belt cannot deliver the required tension. In the chain's case, sprocket teeth hold the chain roller. If the sprocket tooth configuration is square. The direction of the tooth's reactive force is opposite the chain's tension, and only one tooth will receive all the chain's tension. Therefore, the chain will work without back tension.

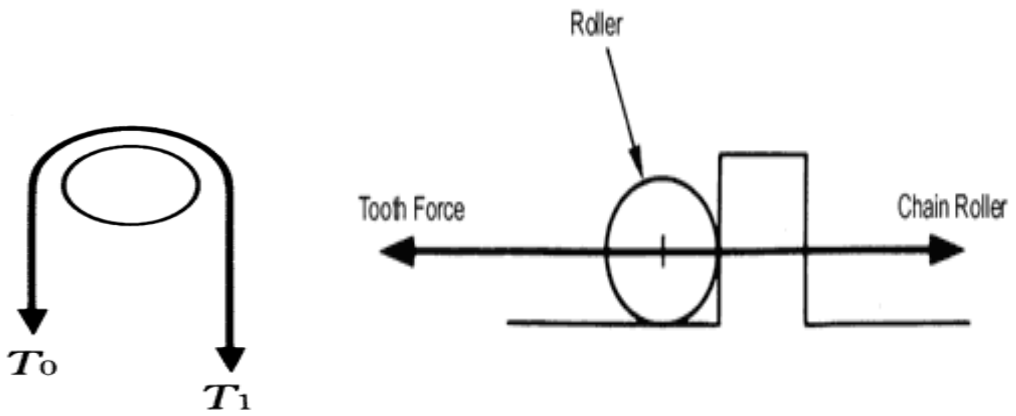

Fig. No. 5.12: Simplified Roller/Tooth Forces

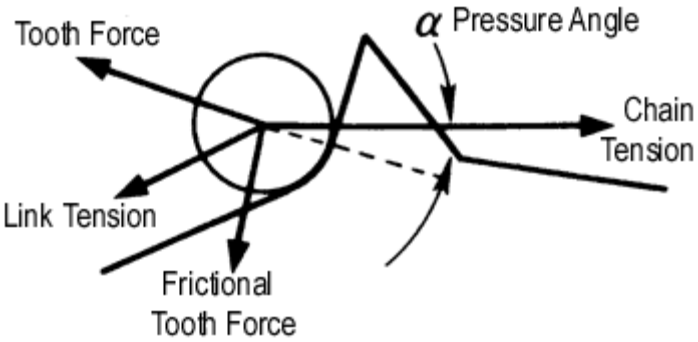

Fig. No. 5.13: Balance of Forces around the Roller

But actually, sprocket teeth need some inclination so that the teeth can engage and slip off of the roller. The balances of forces that exist around the roller are shown in Figure 2.7, and it is easy to calculate the required back tension.

For example, assume a coefficient of friction μ = 0, and you can calculate the back tension (T_k) that is needed at sprocket tooth number k with this formula:

$T_k = T_0$ 3 sin ø k-1 sin (ø + 2b)

Where: To= Chain tension

T_k= back tension at tooth k

ø = sprocket minimum pressure angle 17 64/N(š)

N = Number of teeth

2b= sprocket tooth angle(360/N)

k = the number of engaged teeth (angle of wrap 3 N/360); round down to the nearest whole number to be safe

By this formula, if the chain is wrapped halfway around the sprocket, the back tension at sprocket tooth number six is only 0.96 N. This is 1 percent of the amount of a chain. Using chains and sprockets, the required back tension is much lower than a flat belt. Now let's compare chains and sprockets with a toothed-belt or chain back tension. Although in toothed belts the allowable tension can differ with the number of pulley teeth and the revolutions per minute (rpm), the general recommendation is to use 1/3.5 of the allowable tension as the back tension (F). This is shown in below Figure 2.8. Therefore, our 257 N

force will require 257/3.5 = 73 N of back tension. Both toothed belts and chains engage by means of teeth, but chain's back tension is only 1/75 that of toothed belts.

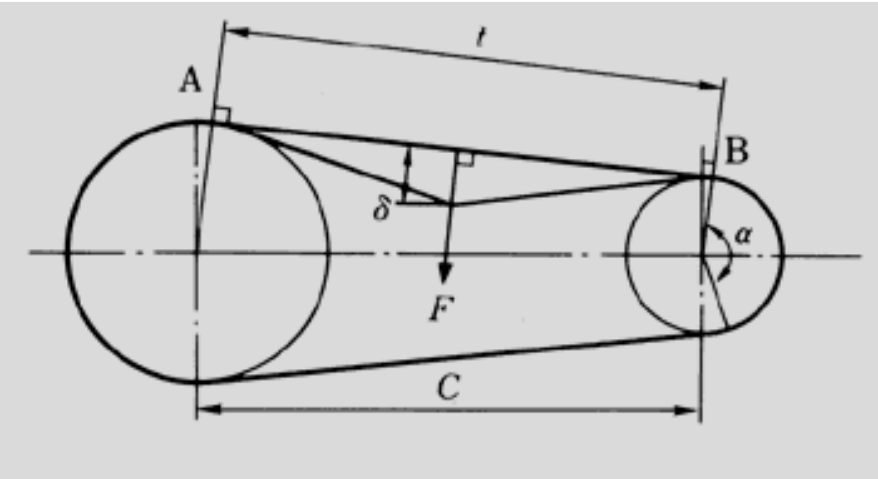

Fig. No. 5.14: Back Tension on a Toothed Belt or Chain

5.6.2 Chain wear and jumping sprocket teeth:

The key factor causing chain to jump sprocket teeth is chain wear elongation. Because of wear elongation, the chain creeps up on the sprocket teeth until it starts jumping sprocket teeth and can no longer engage with the sprocket. There are three sections on the sprocket tooth face:

a: Bottom curve of tooth, where the roller falls into place.

b: Working curve, where the roller and the sprocket are working together.

c: Where the tooth can guide the roller but can't transmit tension. If the roller, which should transmit tension, only engages with C, it causes jumped sprocket teeth.

The chain's wear elongation limit varies according to the number of sprocket teeth and their shape. Upon calculation, we see that sprockets with large numbers of teeth are very limited in stretch percentage. Smaller sprockets are limited by other harmful effects, such as high vibration and decreasing strength; therefore, in the case of less than 60 teeth, the stretch limit ratio is limited to 1.5 percent (in transmission chain).

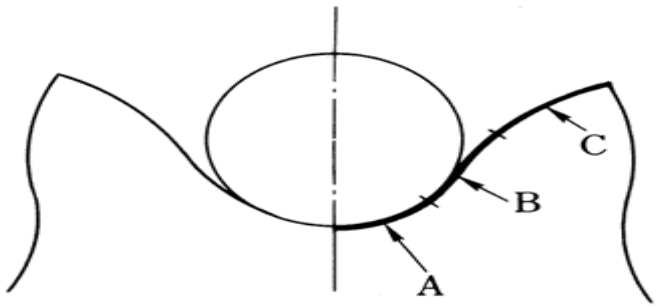

Fig. No. 5.15: Sprocket Tooth Shape and Positions of Engagement

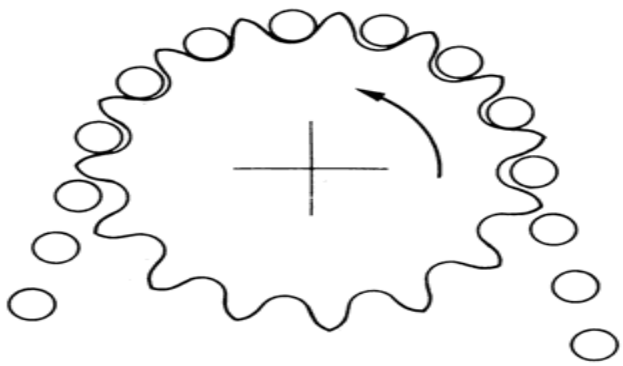

Fig. No. 5.16: The Engagement between a Sprocket andan Elongated Chain

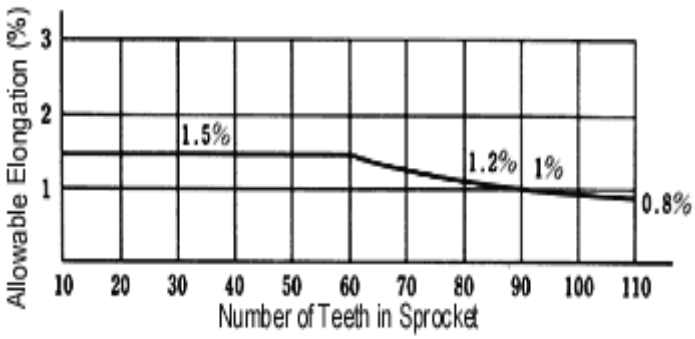

Fig. No. 5.17: Elongation versus the Number of Sprocket Teeth

In conveyor chains, in which the number of working teeth in sprockets is less than transmission chains, the stretch ratio is limited to 2 percent. Large pitch conveyor chains use a straight line in place of curve B in the sprocket tooth face. A chain is a reliable machine component, which transmits power by means of tensile forces, and is used primarily for power transmission and conveyance systems. The function and uses of chain are similar to a belt. There are many kinds of chain. It is convenient to sort types of chain by either material of composition or method of construction.

Chain can sort into five types:

- Cast iron chain.
- Cast steel chain.
- Forged chain.
- Steel chain.
- Plastic chain.

Demand for the first three chain types is now decreasing; they are only used in some special situations. For example, cast iron chain is part of water-treatment equipment; forged chain is used in overhead conveyors for automobile factories.

In the following section of this book, we will sort chains according to their uses, which can be broadly divided into six types:

- Power transmission chain.
- Small pitch conveyor chain.
- Precision conveyor chain.
- Top chain.
- Free flow chain.
- Large pitch conveyor chain.

The first one is used for power transmission; the other five are used for conveyance. In the Applications section of this book, we will describe the uses and features of each chain type by following the above classification. In the following section, we will explain the composition of power transmission chain, small pitch chain, and large pitch conveyor chain. Because there are special features in the composition of precision conveyor chain, top chain, and free flow chain, checks the appropriate pages in the Applications section about these features.

5.6.2.1 Connecting Link:

This is the ordinary type of connecting link. The pin and link plate are slip fit in the connecting link for ease of assembly. This type of connecting link is 20 percent lower in fatigue strength than the chain itself. There are also some special connecting links which have the same strength as the chain itself.

5.6.2.2Basic Structure of Power Transmission Chain:

A typical configuration for RS60-type chain is shown in Figure.

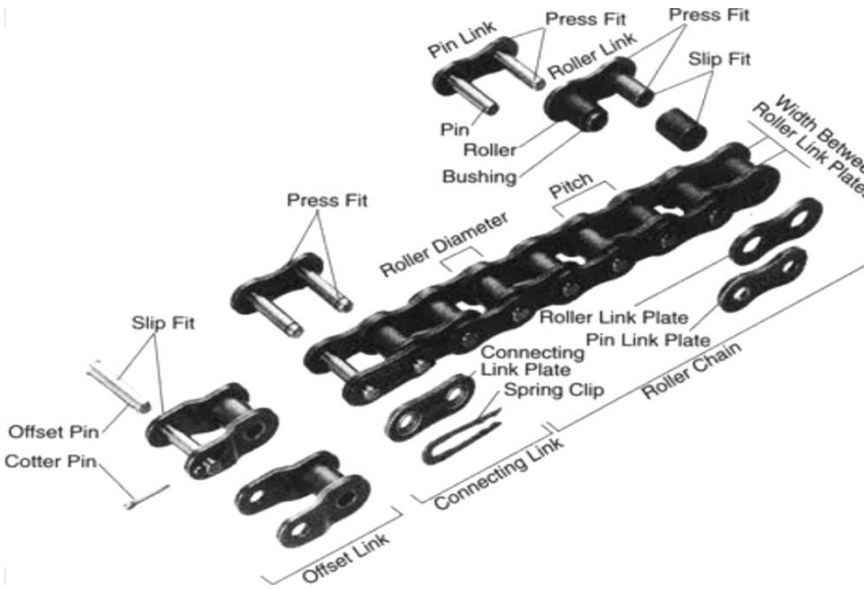

Fig. No. 5.18: The Basic Components of Transmission Chain

5.6.2.3Tap Fit Connecting Link:

In this link, the pin and the tap fit connecting link plate are press fit. It has fatigue strength almost equal to that of the chain itself.

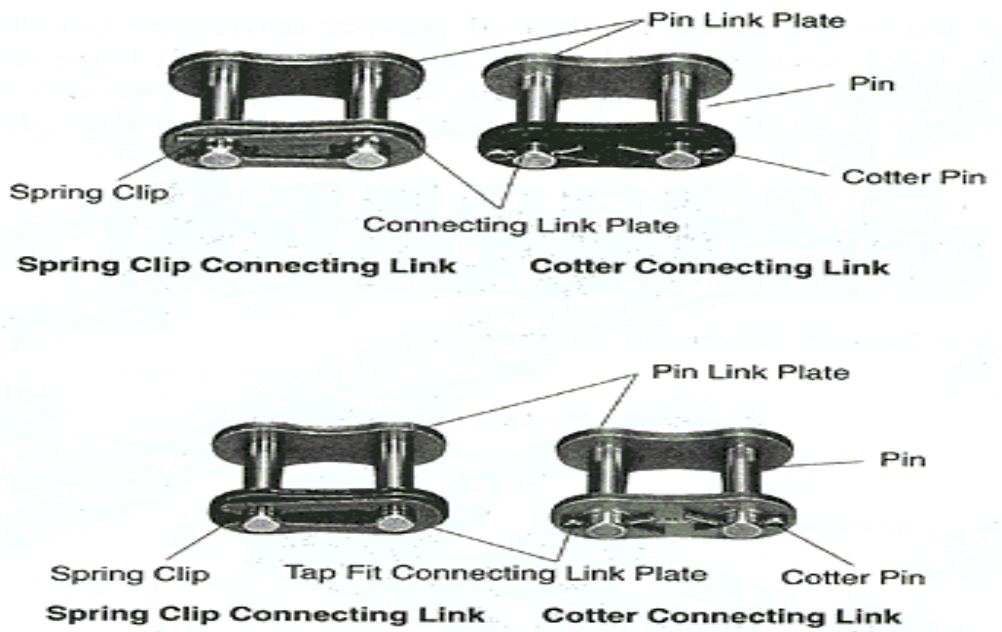

Fig. No. 5.19: Standard Connecting Link (Top) and Tap Fit Connecting Link (Bottom)

CHAPTER-6

METAL FINISHING

6.1 Arc welding:

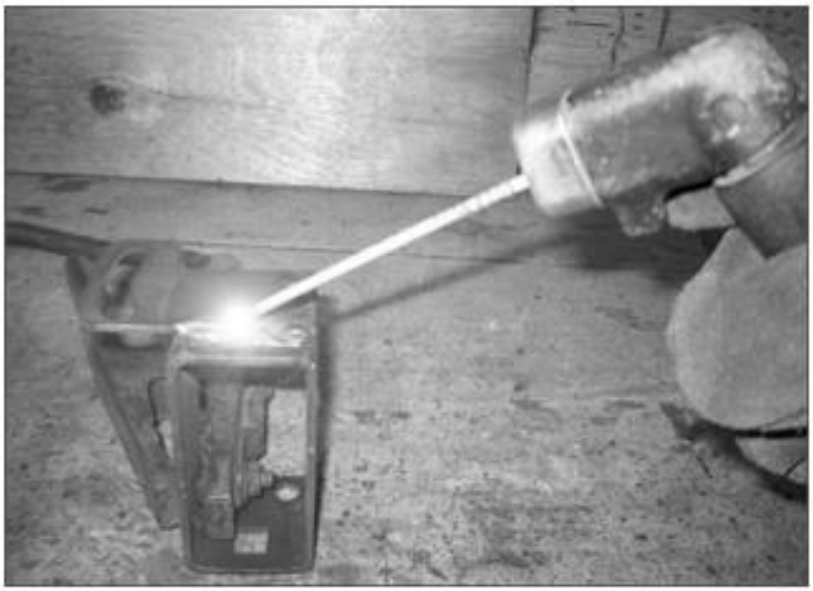

Fig. No. 6.1: Arc Welding Process

Arc welding is a process that is used to join metal to metal by using electricity to create enough heat to melt metal, and the melted metals when cool result in a binding of the metals. It is a type of welding that uses a welding power supply to create an electric arc between an electrode and the base material to melt the metals at the welding point. They can use either direct (DC) or alternating (AC) current, and consumable or non-consumable electrodes. The welding region is usually protected by some type of shielding gas, vapour, or slag. Arc welding processes may be manual, semi-automatic, or fully automated. First developed in the late part of the 19th century, arc welding became commercially important in shipbuilding during the Second World War. Today it remains an important process for the fabrication of steel structures and vehicles.

6.1.1 ARC WELD EQUIPMENTS:

Welding is the joining of metals through coalescence by the use of either heat or pressure or both. Coalescence is a term that means the joining of two materials to become as one piece. The basic arc welder components consist of the machine that generates the power, the electrode holder or wire feed gun, a means of shielding the weld as it forms, and protective equipment for the user.

Fig. No. 6.2: Arc Welding Equipment

Welding is the joining of metals through coalescence by the use of either heat or pressure or both. Coalescence is a term that means the joining of two materials to become as one piece. The basic arc welder components consist of the machine that generates the power, the electrode holder or wire feed gun, a means of shielding the weld as it forms, and protective equipment for the user.

The process begins in all types when the wire or rod makes contact with the piece to be welded. This completes an electric circuit and creates an arc through which the transfer of the metal from the wire or rod to the piece is facilitated. Spatter occurs during transfer; some of the molten drops of metal become airborne and cover the piece and surrounding area with small globules that solidify on cooling. Spatter may be minimized depending on the skill of the operator and the welding method being used.

6.2 CORROSION PREVENTION:

The following methods are used for corrosion prevention of the various components of the Multipurpose sowing machine.

6.2.1RUST CLEANING:

Oxidation creates a scale formation on the surface of the material. Scale formation gives rough structure of surface of iron oxide. This iron oxide formation penetrates into the surface and makes the metal weak and reduces the life of the components. Different grades of emery sheets are used to remove the rust formed on the surface of the steel and cleaned properly.

6.2.2RED OXIDE COATING:

This Red Oxide Paint Coating is to prevent the action of corrosion and protect the Surface of the components from atmospheric corrosion. Red Oxide Paint and Thinner liquid are mixed in proper proportion and coated on the surface of the components. The purpose of thinner is to reduce the viscosity of the paint and free flow of the paint over the surface of the components.

6.2.3FINISH COATING:

Milky white colour paint is applied over the surface of the machine after the application of the above coatings in a smooth manner using a paint sprayer. This final finish coating of the milky white colour of the paint gives good pleasing appearance and effective corrosion prevention.

CHAPTER-7

MODEL OF THE PROJECT

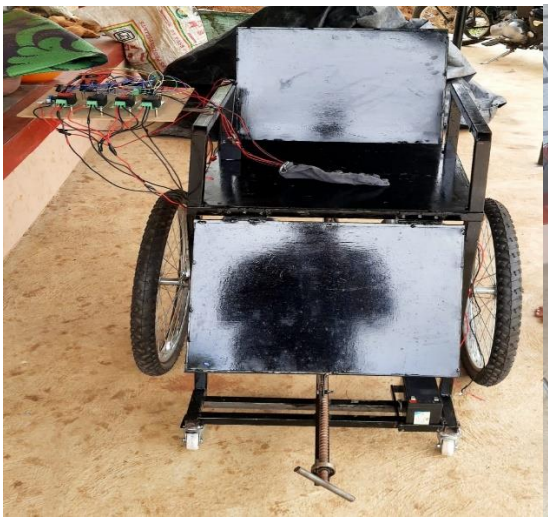

CHAPTER-8

DESIGN AND CALCULATION

8.1 POWER CALCULATIONS:

Torque required on a flat surface

Normal force (Fn) = force applied = mg

= 100*9.81

= 981N

Friction force (F_f) = μFn

= 0.2*981 = 196.2 N

Torque required = F_f*r_w

= 196.2*0.18

= 35.316 N-m

Torque required on slope Stair dimensions

Land: 254.0 mm

Rise: 177.8 mm

Slope of stair (θ) = tan-1 (177.8/254) = 35°

Total mass acting (including setup) = 100kg = 100*9.8 = 981N

Normal force acting (Fn) = mgcosθ

= 100*9.81*cos (35°)

= 803.58 N

Frictional force (F_f) = μF_n

= 0.2*803.58 = 160.7 N

Opposing force (F_o) = mgsinθ

= 100*9.81*sin (35°)

= 562.67 N

Torque required = (F_f + F_o) r_w

= (160.7+562.67) 0.18

= 130.20 N-m

Motor torque generated Power of motor(P) = $2\pi NT/60$

$180 = 2\pi 1.5T/60 * 0.6$ (i.e., 0.6 = efficiency of the motor gear box)

Torque at the mid-shaft T_{mid} = 687.54N-m

Torque generated at wheels = T_{mid} / 1 (1:1 ratio sprocket arrangement)

= 687.5 / 1

= 687.5 N-m

8.2 LOAD CALCULATIONS:

Front caster ←Weight of the body = 14.24 kg = 139.552N

Weight of wiper motor = 2 X 2.25 = 4.5kg = 44.1N

Human body weight = 80kg = 784N

$F_{vertical}$ = (139.552 + 784)N

Load on each caster = 923.552N / 2 = 461.776 N

Inclination angle = 100°

($F_{inclined}$ + $F_{vertical}$) x Cosθ = 923.552 X Cos10° = 909.52 N

Force on each caster = 909.52/2 = 454.760 N

8.2.1 Rear wheel

Weight of body = 14.24kg = 139.552 N

Human weight = 784 N

F_{rear} = (139.552+784) = 923.552N/2 = 461.776 N

F_{rear}(θ=10°) = 923.552Cos10 = 909.521/2 = 454.76 N

8.2.2 Back rest

Human back weight = 31.693kg = 310.91N

Incline = 300°

Back rest weight = 6kg = 58.8N

Force = 310.91 + 58.8 = 369.71N

Force (actual) = 369.71Sinθ = 184.855 N

Leg rest Inclination = 55°

Weight of human leg = 4kg = 39.2N

Force = 39.2 + 39.2 = 79.4N

Force (actual) = 78.4 x Sin550 = 64.22N

8.3 DESIGN OF LEAD SCREW:

Specifications of lead screw:

Pitch of lead screw, P = 10mm

Speed of lead screw, N = 50rpm

Thickness, T = 4mm

Outer Diameter, d2 = 18mm

Inner Diameter, d1 = 14mm

Linear velocity of the lead screw =N × P= 50*10=500mm/min = 8.33mm/sec

Angular velocity of lead screw = 2πN60 = 25060 = 5.236rad/sec

Pitch diameter (D_p) = (d_2+ d_1) /2 = (18 + 14) /2 = 16mm

Helix angle (α) = tan (α) = 1 x D_p = 1 x 16 = 11.25°

Friction angle (φ) = μ = tan φ

0.23 = tan φ

Φ = 12.95°

Torque required to raise the load (T) = W × Dp^2 × tan (φ + α)

=784.8 × 162 × tan (12.95 +11.23)

=268.42 Nmm

Power of lead screw = T × 2πN/60

= 0.268 × 2 50/60 =1.4 w

Direct compressive stress σc = W/ Ac

Ac = πd_1 x d_1/4 = π × 142/4

=153.938 mm^2

σc= (80 × 9.81)/ 153.938 =5.098 N/mm^2

Torsional moment = Mx = Wx^2 × tan (φ +α) = 80×9.81×9×tan(11.25 +12.95)

=3174.32 Nmm

Torsional shear stress (τ) = (16 × 3.174)/ (π × 14)

$=5.89 \times 10\text{-}3\ N/mm^2$

Principle shear stress (τmax) = 2.549 N/mm^2

Principle normal stress (σmax) = 5.098 N/mm^2

Transverse shear stress in screw (τs) =W / (π. d_1. t. I) = (80 ×9.81)/ (π × 14 × 4 × 43)

=0.103 N/mm^2

Efficiency of screw =tan α/ tan (φ + α) =tan (11.25)/tan (12.95+11.25) =44 =44%

AS η < 50%

So, it is self locking.

8.4 LIST OF MATERIALS:

SL. NO.	NAME OF THE PARTS	MATERIAL	QUANTITY
1	Battery	Lead-Acid	1
2	D.C. Motor (12 V)	Aluminium	2
3	Chain and sprocket	Mild Steel	2
4	Bolt & Nut	M.S	12
5	Ms shaft	M.S	1
6	Frame Stand	M.S	1
7	Connecting Wire	Cu	-
8	Ball bearings	Ss	4
9	Sheet metal	MS	
10	cycle wheel tyre	rubber	2
11	Rotating wheel	nylon	2
12	Lead screw	MS	2
13	Controller unit		1
14	Relays		4
15	Flex sensors		4

8.5 MATERIALS COST:

SL.	NAME OF THE	MATERIAL	QUANTITY	AMOUNT
1	Battery	Lead-Acid	1	900
2	D.C. Motor (12 V)	Aluminium	2	1100
3	Chain and sprocket	Mild Steel	2	800
4	Bolt & Nut	M.S	12	100
5	Ms shaft	M.S	1	300
6	Frame Stand	M.S	1	2500
7	Connecting Wire	Cu	-	200
8	Ball bearings	Ss	4	600
9	Sheet metal	MS	150*650	2500
10	cycle wheel tire	Rubber	2	1000
11	Rotating wheel	Nylon	2	400
12	Lead screw	MS	2	100
13	Controller unit		1	1000
14	Relays		4	700
15	Flex sensors		4	800

TOTAL COST =13000

8.6LABOUR COST:

Lathe, drilling, welding, grinding, power hacksaw, gas cutting Cost = 1000

8.7OVERHEAD CHARGES:

The overhead charges are arrived by “Manufacturing cost”

Manufacturing Cost =Material Cost + Labour cost

= 13000+1000

= 14000

Overhead Charges =20% of the manufacturing cost

= 2800

Total cost=Material Cost + Labor cost + Overhead Charges

= 14000+1000+2800

= 17800

Total cost for this project =17800

8.8 FUTURE SCOPE:

From this survey we understand, this work is to help the disabled person by implementing flex sensors and voice command based control system for the wheelchair and providing alternative methods to control the equipment, thereby serving many disabilities. Thus the wheelchair understands the signals coming from the control system and reacts accordingly. Functional intelligent wheelchair is practical and helpful to people with certain types and degree of handicap. Through we are mainly focusing on flex sensor and voice recognition based system interface, more advancement can be done through more research. Flex controlled is completely works on movement of the finger can be able to take up to 100kg load without chassis weight and able to control vehicle right,left, front and back movement.

8.9 CONCLUSION:

The project was aimed at designing and manufacturing a flex controlled wheelchair cum stretcher that can overcome the shortcomings of a conventional wheelchair, with focus on cost effectiveness and utility. The existing system has the limitation of shifting patients from wheel chair to stretcher. This product will be helpful for paralyzed patients, movement impaired personals, as well as for old age persons. Our product will eliminate the use of separate wheelchair and stretcher and can run the vehicle using finger motion of the patient and it is self drive without applying any force to the wheelchair,. The wheelchair will consume less space and is manufactured at low cost. Maximum using available technology and material we designed and fabricate such equipment can induce self-reliability and satisfaction in the users.

REFERENCES:

1. Sandeep, Supriya, M.Tech Scholar, Assistant Professor, **"Wheel-Chair Control Using Accelerometer Based Gesture Technology"**, Volume 4, Issue 5, May 2015

2. D. Anjaneyulu, Mr. B.V.N.R. Siva Kumar **"Hand movements based control of an intelligent wheelchair Using Accelerometer, obstacle avoidance using Ultrasonic and IR sensors"**, Volume 11, Issue 07, July 2015

3. Shahida Siddiqui, Sampath S S, Mohammad Asim, Sadoon Azmi, Vikram Shankar, Adnan Ahmad, ChithiraiPon Selvan M, **"Design and fabrication of automated wheel chair for quadriplegic patients"**, Volume 6, Issue 2, 2017

4. Jayashree P.Wakalkar , AkshayIngale , Amol Wadhi, Nikhil Sawarkar, Vishal Belekar, Shrikant Peshatwar**"Design and fabrication of android controlled powered wheelchair"**, Volume 4, Issue 2, April 2016

5. Hasnayen Ahmed, Kazi Ehsanul Karim, Helal-An-Nahiyan**"Design, simulation and construction of an automatic wheelchair"**, volume 3, Issue 2, December 2015

6. Muhammed shafeeque T P, Muhasid P, Shyam M S, Sinto sunny, **"Automatic wheel chair cum bed"**, volume 4, Issue 2, December 2017

7. Joshi Mohit J, Bhavsar Deep S, Patel Vishal N, Prajapati Mehul P, **"Design and development of automatic wheel chair and bed for old-age home"**, 2014-15

8. Arunkumar S M, Abhijith P K, Haneepsab A Karoshi, Chetan C, **"Design and fabrication of stretcher cum wheelchair"**,Volume 2, Issue 5, May 2017

9. Neha Tiwari, Vishal Arya, Sukesh Kumar, AkshayBhole, **"Automatic wheelchair using flex sensor abstract"**, April 2018

10. AkshayHirudkar , Chetan Bhusari ,AkshayKhedkar,AkshayParekar, **"Automatic stretcher cum wheelchair"**, Volum 4, Issue 3, Mar 2017

11. Prof. Chitte P P, Khemnar S B, Kanawade A A, Wakale S B, **"A hand gesture based wheelchair for physically handicapped person with emergency alert system",** Volume 3, Issue 4, Apr-2016